Galletti
AIR CONDITIONING

MULTIFUNCTION HEAT PUMPS

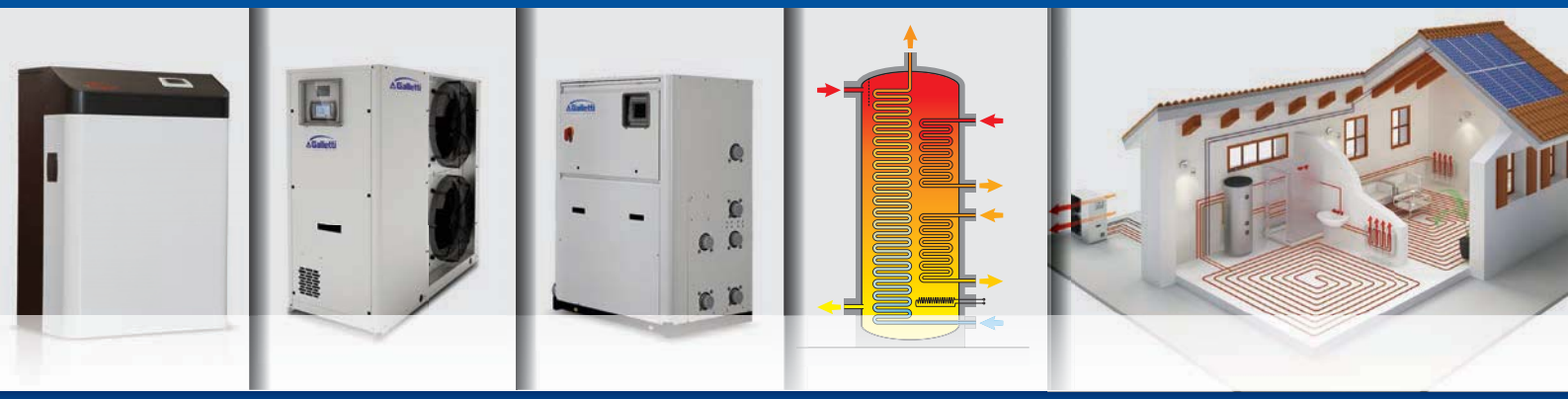

MULTI-PURPOSE SYSTEMS: A SYSTEM, MANY ANSWERS

Advantages of the multi-purpose system
> Environment protection thanks to the excellent COP and EER values
> Fossil energy savings
> No risks of burst, fire and poisoning from fossil fuels
> Completely programmable. Configurable online remote management
> Low maintenance requirements due to the absence of wearable parts
> Quiet operation
> Absence of harmful local emissions and CO2
> High availability of energy drawn from the room in different ways
> Non-polluting. It can be powered by renewable energy sources




The ever-increasing need to reduce energy consumption and increase production efficiency of chilled water for air conditioning and hot water for heating and the domestic water supply, combined with the need to make these processes independent of each other and the operating season, finds its full achievement in the new Galletti MULTI-PURPOSE series.

A "true" multi-purpose unit is capable of total recovery in the summer operating mode in order to produce domestic hot water (without inverting the cooling cycle resulting in an inevitable lowering of system efficiency and comfort).

This is a "so-called" 4-pipe unit that will be connected to two distinct water circuits: the first one for air heating/conditioning of the building, the second one for the production of DHW.

Generally speaking, multi-purpose applies to air/water units or water/water units, single or dual circuits units, package or split version units, with ON/OFF or inverter compressor (with permanent magnets motor, also called **B**rush**L**ess-**DC**).

Multi-purpose systems: strong points

Let us consider first a **single circuit air/water unit**, featuring the 5 typical seasonal operation modes of a "true" multi-purpose unit, i.e.

1. **SUMMER PROGRAMMING:**Cold water production as a traditional chiller (water evaporation on the "user side" and air condensing on the "exchanger side").
2. **SUMMER PROGRAMMING:**Cold water production with total condensation heat recovery (total water condensation for the production of DHW by means of a dedicated plate exchanger).
3. **WINTER PROGRAMMING:**Hot water production for heating purposes , as a traditional heat pump (air evaporation on the "exchanger side" and water condensation on the "user side").
4. **WINTER PROGRAMMING:**Production of DHW temporarily stopping hot water production for air heating purpose (DHW priority). In other words, air evaporation on the "exchanger side" and water condensation for the production of DHW by means of a dedicated plate exchanger).
5. **IN-BETWEEN SEASONS:**Production of DHW only (in cooling or heating modes) by means of heat exchanger evaporation.

Here below, a basic diagram of a cooling circuit of a multi-purpose unit.

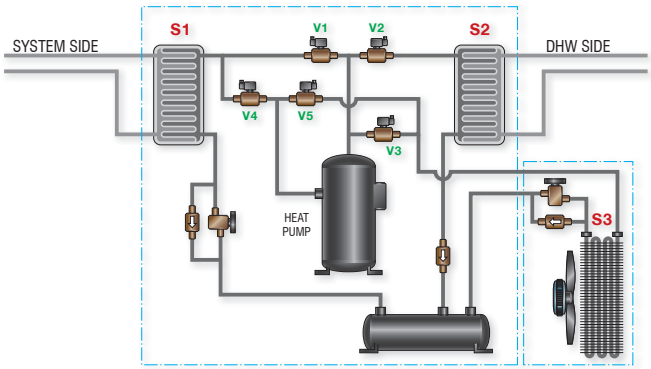

The refrigerant path in the different operating modes is managed by solenoid valves (see figure) that are open or closed according to the function requirements.

Winter configuration

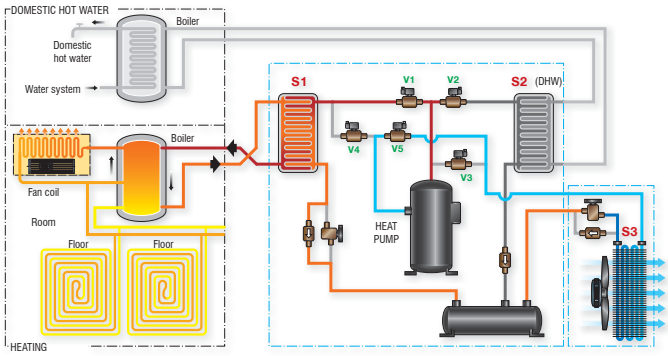

Domestic Hot Water/ Year-round operation

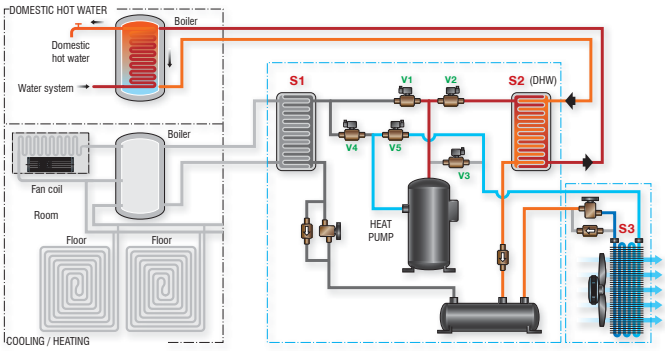

Summer configuration (total heat recovery)

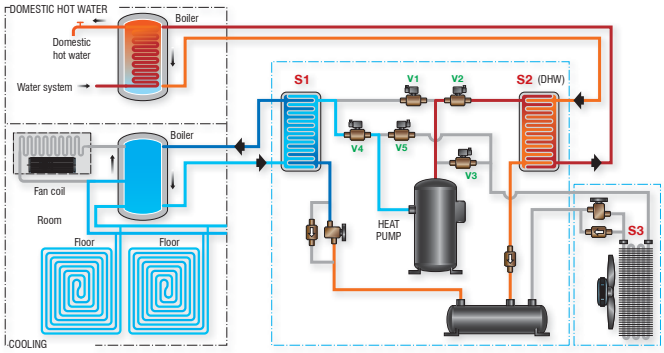

Summer configuration

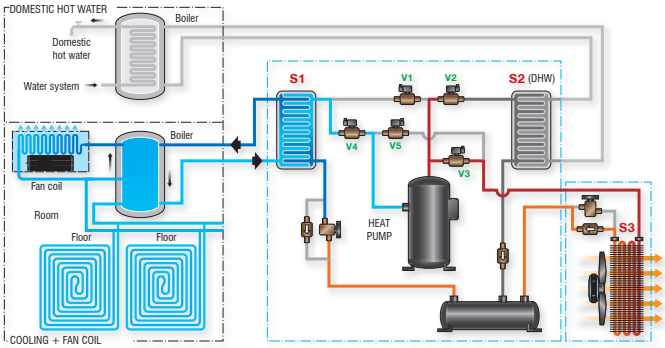

HIGH EFFICIENCY TOTAL HEAT RECOVERY MULTI-PURPOSE MODULATING SYSTEM

- > SPLIT VERSION
- > HEATING
- > COOLING
- > DEHUMIDIFICATION
- > DOMESTIC HOT WATER
- > USING RENEWABLE HEATING SOURCES
- > MAXIMUM ENERGY EFFICIENCY
- > TOTAL HEAT RECOVERY
- > INTEGRATED HYDRONIC SYSTEM
- > TOTAL SAFETY

HiWarm is a multi-purpose total condensation heat recovery split heat pump.
Exchanging heat with external air enables the room to be conditioned and to produce hot water for sanitary purposes without the use of electric elements. During summer time the cooling system is capable of producing hot water and chilled water simultaneously.

There are 3 sizes available, classified on the basis of cooling capacity to be delivered at the maximum power frequency of the compressor.

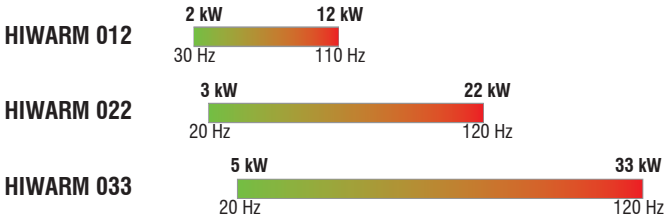

The characteristics shared by all 3 sizes of HiWarm units can be summed up as follows:

- Indoor unit where the compressor is housed so as both to reduce outdoor noise emissions and allow the construction of a lightweight outdoor unit that can be positioned above the ground with simple brackets.
- Remote dissipator where the coil and the fans are housed. It is available in a version for outdoor installation and in a duct version for indoor installation.

Main constructive features of HiWarm units:

- Double water circuit.
- Air conditioning circuit with reversible system on cooling circuit side and water side and min/max variable set-point through a voltage-free contact or from min/max through a 0-10V or 4-20mA signal.
- ACS circuit with total recovery (in the event of simultaneous cooling) or in any case with recovery as a priority. This circuit is separate and unlike in other similar products on the market it does not require long heating/cooling phases for inertial storage which impair energy efficiency, above all in summertime.
- Scroll or twin-rotary compressors - BLDC brushless technology.
- Exchangers with high efficiency braze-welded AISI 316 plates.
- Highly efficiency fans.
- Throttle valve: EEV (electronically controlled electric thermal expansion valve) to take advantage from the possibility of generating thermodynamic cycles under reduced pressure let-downs, resulting in clear benefits in terms of COP.
- Integrated control of pumps on the system side and the DHW side: Both pumps are modulating pumps with permanent magnets electric synchronous motor.
- Advanced electronic control allowing to meet the load control step requirements.

These critical components guarantee an optimal performance under part load conditions, which are increasingly taken into consideration and are a discriminating factor in the choice of thermal engineers.

WINTER

Heating + domestic hot water

IN THE WINTER SEASON HIWARM CAN PRODUCE HOT WATER FOR THE HEATING SYSTEM AS WELL AS DOMESTIC HOT WATER, WITH OUTDOOR TEMPERATURES AS LOW AS -15°C AND WATER TEMPERATURES OF UP TO 60°C.

MILD CLIMATES

domestic hot water only

DURING IN-BETWEEN SEASONS HIWARM CAN PRODUCE ONLY DOMESTIC HOT WATER, WHEREAS THE AIR CONDITIONING SYSTEM - SUMMER AND WINTER MODES - REMAINS OFF

SUMMER

Domestic hot water + cooling

SUMMER

Domestic hot water + cooling and dehumidification

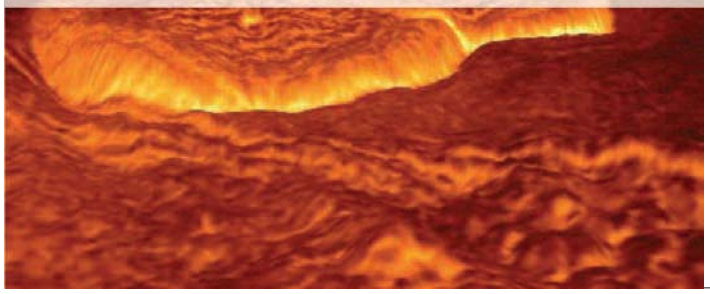

IN THE SUMMERTIME OPERATING MODE, DOMESTIC HOT WATER AND CHILLED WATER ARE PRODUCED AT "ZERO COST" SIMULTANEOUSLY AND USED FOR ROOM AIR COOLING AND/OR DEHUMIDIFICATION REQUIREMENTS

STRUCTURAL COMPONENTS

INDOOR UNIT
Galvanised steel perimeter enclosure panels with an epoxy polyester powder coating, oven cured at 180°C, and front plexiglass cover which also incorporates the display (LCD).
All components of the unit are accessible from the front of the unit, by simply removing the front panel.
The BLDC compressor, the high efficiency modulating pumps, the two braze-welded plate exchangers, the electronic expansion valve, the onboard controller, the cycle reversing valve on the water side and the solenoid valves are housed in the indoor unit.

REMOTE UNIT FOR OUTDOOR INSTALLATION
Panels coated with epoxy polyester powder paint oven cured at 180°C.
The unit is completely enclosed with panels and available in RAL9002 (Grey White). The fans and the finned coil are housed in the outdoor unit.
6 pole axial fans with blades ensuring broad coverage, associated with external rotor asynchronous motors (or synchronous permanent magnets) and fan continuous speed modulation.
EC fans equipped with permanent magnets synchronous motors are available as option.

REMOTE UNIT FOR INDOOR INSTALLATION (ATTIC)
Galvanised sheet steel panelling, coated with epoxy polyester powder paint oven cured at 180°C.
The unit is completely enclosed with panels and available in RAL9002 (Grey White).
Centrifugal fans with reaction impellers and backward curved blades combined with brushless BLDC motors to ensure continuous efficient modulation.
Maximum head available at 200 Pa.

Scroll	Twin Rotary
	

COMPRESSORS
Hermetic scroll compressors (respectively for the 22 DC and 33 DC) or twin rotary compressors (for the 12 DC), complete with motor protection against temperature and current overloads and excessive temperatures of the outgoing gas.
Mounted on rubber vibration dampers, complete with oil charge and housed in a compartment that is soundproofed with sound absorbing material. They are also equipped with an automatic oil heater to prevent the oil from being diluted by the refrigerant when the compressor stops.
Brushless permanent magnet AC compressor motor controlled by a trapezoidal wave driver within a speed range between 30 (20) and 120 Hz (BLDC "Brushless Direct Current" technology).

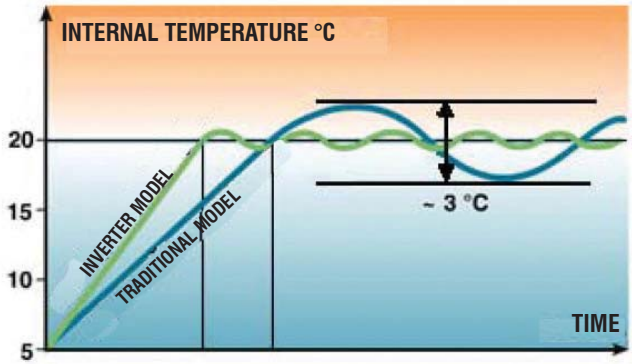

INTERNAL EXCHANGERS
All units have heat exchangers with braze-welded AISI 316 austenitic stainless steel plates and connections made of AISI 304 L, characterised by a reduced carbon content to facilitate brazing.
Braze-welded plate exchangers represent the state of the art in terms of heat exchange efficiency and make it possible to significantly reduce the refrigerant charge compared to traditional solutions.
The high turbulence induced by the internal corrugation of the plates and the perfectly smooth surface of the plates themselves also hinders the build-up of dirt. The high thermal exchange coefficient on the refrigerant side, in combination with the new plate geometry, enables a much shorter approach to the T set-points, with clear benefits in terms of energy.

PUMPS

Use wet-rotor circulation pumps with EC motors, maintenance free, high efficiency (class A) and electronically controlled.
The pump casing is made of grey cast iron with a cataphoretic KTL coating, which provides optimal protection against corrosion. The thermal insulation is polypropylene, the shaft is stainless steel, the bearings are made of metal-impregnated carbon and the rotor, with a three-dimensional spiral is made of a synthetic material with a hermetic insulating coating of composite carbon fibre material.
They are supplied with a heat-insulating shell for heating applications and insulating preformed shells for cooling.

ELECTRONICALLY CONTROLLED ELECTRIC THROTTLE VALVE

An electronically controlled electronic valve is used instead of a classic mechanical thermostatic valve, because it is able to handle transients in a shorter time and to operate with very small ΔP.
The shutter in the central part of the valve can always slide vertically with a wide range of movement to allow the orifice through which the fluid passes to be opened by varying degrees.
Using this valve makes it possible to reduce the amount of energy consumed by the compressor when the surrounding conditions allow the difference between the condensation and evaporation pressures to be reduced to values below 5 bar.

CYCLE REVERSING VALVE ON WATER SIDE

HiWarm units are reversible: when switched from the cooling to heat pump mode and vice versa, they carry out two cycle reversals. One on the refrigerant side and one on the water side.
The cycle reversing valve on the water side is switched from position A to position B (in less than 20 seconds) and vice versa by means of an electric driver, without changing the direction of flow for users; this allows the direction of flow to be reversed in the exchangers, so that it is always opposite the direction of flow of the refrigerant fluid.

ONBOARD CONTROLLER

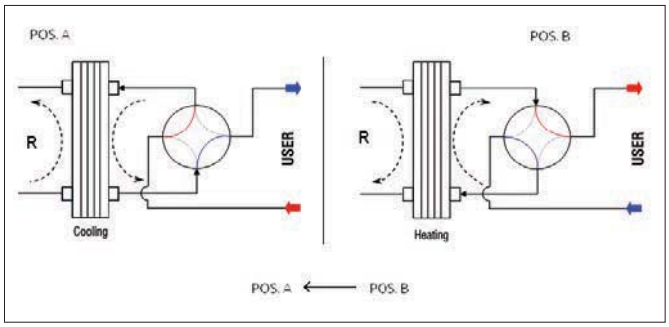

Functions of on-board control system:
- Control of the different operating parameters
- Modulation of the compressor to maintain the outlet temperature set point of heat pump
- Management of alarms (high/low pressure, antifreeze, flow switch, pump alarm)
- Management of pumps
- Display of operating parameters
- Antifreeze protection of heat exchangers
- Management of the maximum number of compressor start-ups
- Serial output management (optional)
- Interfaceability via WEB with the Webgate option; all it takes is a simple connection and any Internet browser can be used
- Summer/winter and on/off switching through clean contact or on-board control

THE SUPERVISION SOFTWARE integrated into the unit is available.

The WEB circuit card allows a connection to be made between the onboard controller of the unit and the 10 Mbps Ethernet RJ45 network. The operating system used is Linux 2.4.21 .
Installation takes place directly on the serial port of the advanced controller and a static or dynamic IP address with DHCP function is used.
The supervision software permits the following:
- Display of unit status
- Display of current alarms and alarm history
- Recording of data with 10 settable variables
- Downloading of all data records via a web browser or FTP
- Possibility of editing the main parameters
- Sending of e-mails to 5 different recipients in case of alarm

With supervision software it is also possible to perform supervisory monitoring using the following protocols:
- SNMP v1 & v2c
- BACnet Ethernet or BACnet/IP

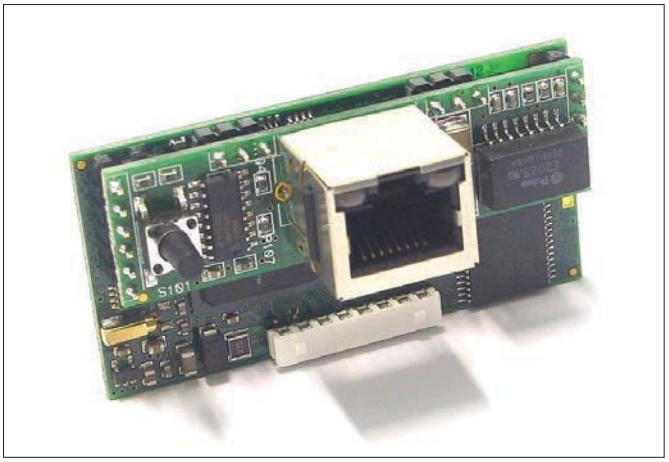

TECHNICAL DATA

Thermodynamic performances of HiWarm units equipped with electronic pumps (standard) and electronic control fans (optional) have been reported in accordance with standard EN14511-2400. ESEER values have been calculated in accordance with Eurovent standards. Performances have been calculated for a maximum length of 10 m for the gas lines connecting the internal unit to the remote one (internal or external).

			HiWarm012		HiWarm022		HiWarm033	
Compressor speed		[Hz]	30	110	30	120	30	120
ESEER radiant panels (user @ 23-18°C) *			8.61		6.69		6.52	
ESEER Eurovent fan-coils (user @ 12-7°C)			5.65		5.30		5.24	
Cooling @ 35°C air 12/7°C water	Cooling capacity	[kW]	3.0	11.2	6.0	20.4	9.6	31.9
	Compressor input power	[kW]	0.6	3.1	1.3	7.0	2.1	11.0
	Compressor input current	[A]	7.4	8.3	11.1	12.6	16.6	19.8
	Fan input power	[kW]	0.08	0.30	0.07	0.45	0.06	0.60
	Fan input current	[A]	0.40	1.40	0.10	0.80	0.10	1.10
	EER	[-]	4.41	3.26	4.38	2.71	4.50	2.72
	USER water flow rate	[kg/h]	519	1921	1026	3517	1646	5480
	USER water pressure drops	[kPa]	2.0	19.0	3.0	26.0	3.0	23.0
	DISSIPATION air flow rate	[m³/h]	3500	7000	5250	10500	7000	14000
Cooling @ 35°C air 23/18°C water	Cooling capacity	[kW]	4.2	15.7	8.5	28.1	8.6	44.0
	Compressor input power	[kW]	0.6	3.2	1.3	7.5	1.2	11.8
	Compressor input current	[A]	6.9	8.6	10.9	13.2	3.2	20.4
	Fan input power	[kW]	0.08	0.30	0.06	0.45	0.05	0.60
	Fan input current	[A]	0.40	1.40	0.10	0.80	0.10	1.10
	EER	[-]	6.27	4.41	6.34	3.46	6.80	3.47
	USER water flow rate	[kg/h]	714	2696	1458	4834	1472	7565
	USER water pressure drops	[kPa]	3.0	37.0	4.0	49.0	11.1	44.0
	DISSIPATION air flow rate	[m³/h]	3500	7000	5250	10500	7000	14000
DHW @ 50/55°C and 30°C outdoor air	Heating capacity	[kW]	3.3	16.6	7.6	32.3	11.8	51.7
	Compressor input power	[kW]	0.9	4.3	2.1	9.5	3.2	14.2
	Compressor input current	[A]	12.8	18.4	15.2	23.7	20.2	25.9
	Fan input power	[kW]	0.08	0.30	0.06	0.45	0.05	0.60
	Fan input current	[A]	0.40	1.40	0.10	0.80	0.10	1.10
	COP	[-]	3.46	3.54	3.58	3.14	3.63	3.37
	DHW water flow	[kg/h]	714	2860	1307	5563	2169	8885
	DHW pressure drops	[kPa]	3.0	41.0	4.0	64.0	4.0	61.0
	DISSIPATION air flow rate	[m³/h]	3500	7000	5250	10500	7000	14000
Cooling + DHW @ 50/55°C and 12/7°C	Cooling capacity	[kW]	2.4	9.2	4.7	17.1	7.9	28.1
	Heating capacity	[kW]	3.2	13.1	6.4	25.5	10.6	40.9
	Compressor input power	[kW]	0.9	4.1	1.8	8.9	2.9	13.4
	Compressor input current	[A]	10.6	11.0	14.8	15.3	22.7	23.7
	Fan input power	[kW]	0.0	0.0	0.0	0.0	0.0	0.0
	Fan input current	[A]	0.0	0.0	0.0	0.0	0.0	0.0
	COP	[-]	3.55	3.16	3.49	2.86	3.68	3.03
	USER water flow rate	[kg/h]	407	1580	806	2944	1357	4839
	USER water pressure drops	[kPa]	1.0	13.0	3.0	18.0	3.0	18.0
	DHW water flow	[kg/h]	556	2252	1107	4393	1829	7026
	DHW pressure drops	[kPa]	2.0	26.0	4.0	40.0	4.0	38.0

***** Value calculated according to the same procedure as ESEER Eurovent Fan-coils (user @ 12-7°C).

TECHNICAL DATA

			HiWarm012		HiWarm022		HiWarm033	
Compressor speed		[Hz]	30	110	30	120	30	120
ESEER radiant panels (user @ 23-18°C) *			8.61		6.69		6.52	
ESEER Eurovent fan-coils (user @ 12-7°C)			5.65		5.30		5.24	
BT Heating @ 30-35°C and 7°C outdoor air	Heating capacity	[kW]	2.9	11.7	5.8	22.7	9.4	34.9
	Compressor input power	[kW]	0.7	3.3	1.5	7.1	2.3	10.8
	Compressor input current	[A]	8.6	8.9	12.3	12.7	18.9	19.6
	Fan input power	[kW]	0.30	0.30	0.45	0.45	0.60	0.60
	Fan input current	[A]	1.40	1.40	0.80	0.80	1.10	1.10
	COP	[-]	2.84	3.23	3.00	2.95	3.21	3.02
	USER water flow rate	[kg/h]	499	2014	1000	3903	1618	5998
	USER water pressure drops	[kPa]	2.0	21.0	4.0	32.0	4.0	28.0
	DISSIPATION air flow rate	[m³/h]	7000	7000	10500	10500	14000	14000
BT Heating @ 30-35°C and 7°C outdoor air	Heating capacity	[kW]	3.1	12.2	6.1	23.5	9.8	35.7
	Compressor input power	[kW]	0.6	2.7	1.2	5.8	1.9	8.9
	Compressor input current	[A]	7.2	7.5	10.6	11.0	15.8	16.5
	Fan input power	[kW]	0.30	0.30	0.45	0.45	0.60	0.60
	Fan input current	[A]	1.40	1.40	0.80	0.80	1.10	1.10
	COP	[-]	3.48	4.03	3.69	3.65	3.91	3.71
	USER water flow rate	[kg/h]	527	2093	1050	4034	1687	6147
	USER water pressure drops	[kPa]	2.0	22.0	4.0	34.0	4.0	29.0
	DISSIPATION air flow rate	[m³/h]	7000	7000	10500	10500	14000	14000
Electrical input	Power supply		single-phase 230/1/50		three-phase 400/3/50		three-phase 400/3/50	
	FLA with fans adjusted by potentio-meter	[A]	21,8		23,0		33,2	
	FLA with EC electronic fans	[A]	21,2		22,0		31,8	
Noise emissions	Lw sound power level - internal unit	[dBA]	54		55		57	
	Lp sound pressure level (10m Q=2) internal unit	[dBA]	26		27		29	
	Lw sound power level - external unit	[dBA]	65		66		69	
	Lp sound pressure level (10m Q=2) external unit	[dBA]	37		38		41	
Compressor	Compressor type		Twin Rotary		Scroll		Scroll	
	Electric motor type		BLDC		BLDC		BLDC	
	Oil charge for compressor	[l]	1.8		1.5		1.8	
	No. of cooling circuits		1		1		1	
Dimensions, weights and connections	Internal module dimensions (LxDxH)	[mm]	803x1120x501.5		803x1247x606		803x1247x606	
	External module dimensions (LxDxH)	[mm]	1120x1230x450		1410x1280x450		2000x1512x550	
	Weight of internal module	[kg]	190		260		270	
	Weight of external module	[kg]	50		100		123	
	Dimensions of hydraulic connectors	[mm]	28		35		35	
	Cooling connections		Rotalock		Rotalock		Rotalock	

* Value calculated according to the same procedure as ESEER Eurovent Fan-coils (user @ 12-7°C).

OVERALL DIMENSIONS

HiWarm 012 indoor unit dimensions

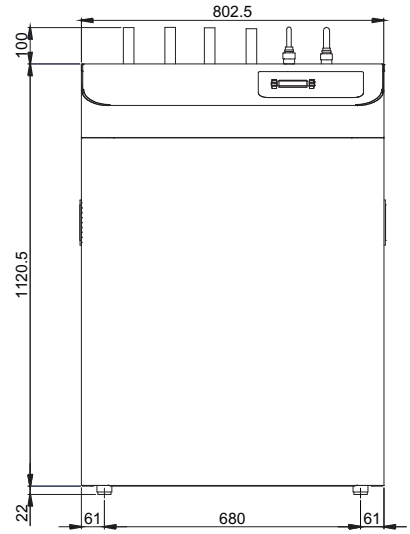

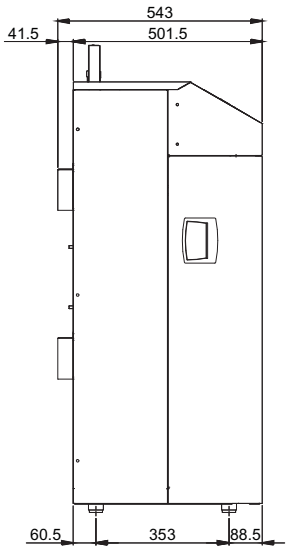

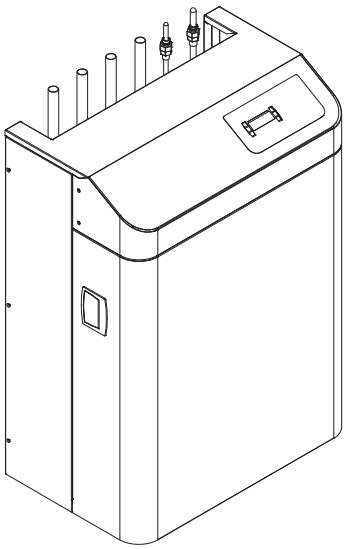

CONNESSIONI ELETTRICHE
ELECTRIC CONNECTIONS
STROMVERSORGUNG

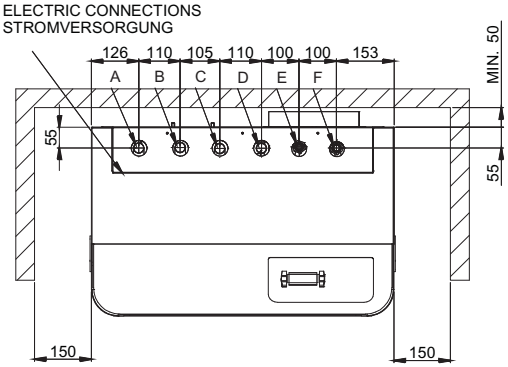

Hidraulic connections			
Ref.	**Connections**	**Type**	**HWM012**
A	A/C system water outlet	Copper Pipe	Ø28 M
B	A/C system water inlet	Copper Pipe	Ø28 M
C	DHW water outlet	Copper Pipe	Ø28 M
D	DHW system water inlet	Copper Pipe	Ø28 M
E	Liquid piping for outdoor unit	Rotalock	Ø12 F
F	Gas piping for outdoor unit	Rotalock	Ø16 F

OVERALL DIMENSIONS

HiWarm 012 outdoor unit dimensions

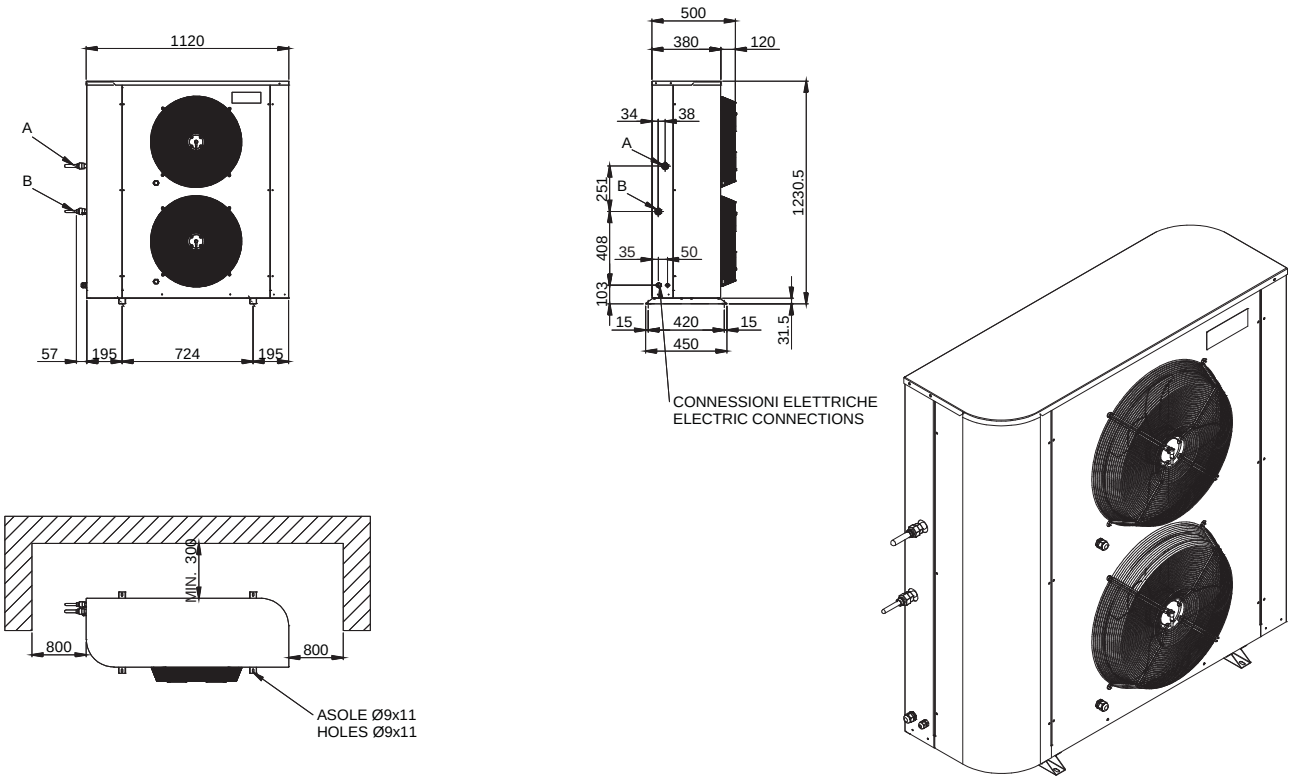

Hidraulic connections			
Ref.	**Connections**	**Type**	**HWM012**
A	Gas piping for indoor unit	Rotalock	Ø16 F
B	Liquid piping for indoor unit	Rotalock	Ø12 F

OVERALL DIMENSIONS

HiWarm 022 and HiWarm 033 indoor units dimensions

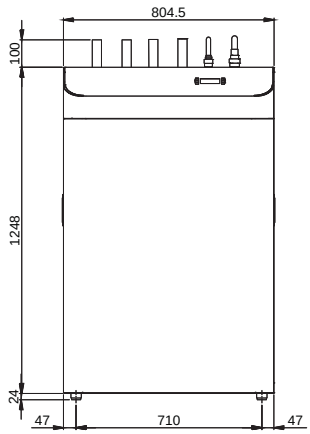

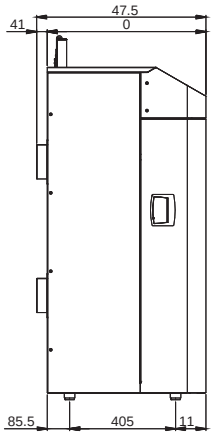

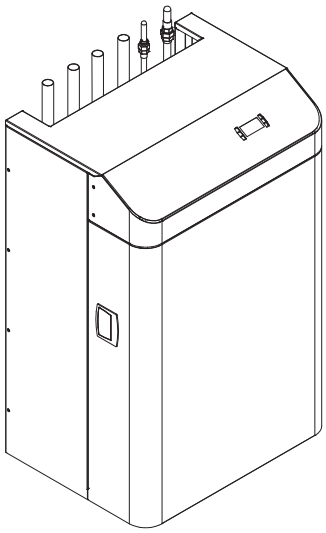

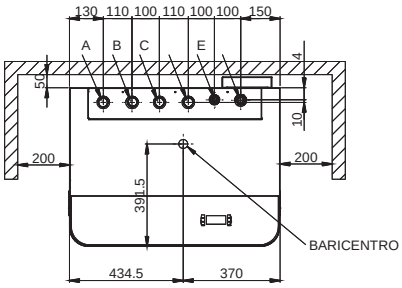

Hidraulic connections				
Ref.	**Connections**	**Type**	**HWM022**	**HWM033**
A	A/C system water outlet	Copper Pipe	Ø35 M	Ø35 M
B	A/C system water inlet	Copper Pipe	Ø35 M	Ø35 M
C	DHW water outlet	Copper Pipe	Ø35 M	Ø35 M
D	DHW system water inlet	Copper Pipe	Ø35 M	Ø35 M
E	Liquid piping for outdoor unit	Rotalock	Ø12 F	Ø16 F
F	Gas piping for outdoor unit	Rotalock	Ø22 F	Ø22 F

OVERALL DIMENSIONS

HiWarm 022 outdoor unit dimensions

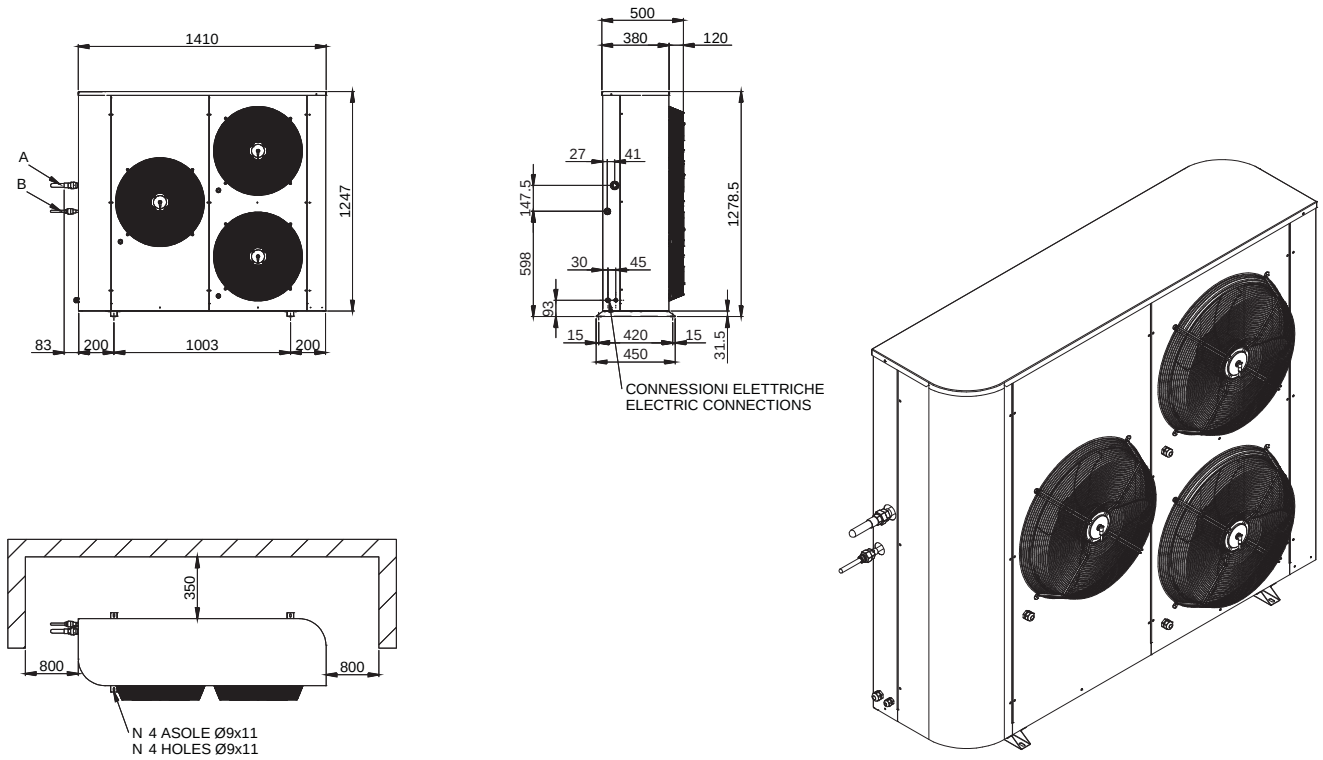

Hidraulic connections			
Ref.	**Connections**	**Type**	**HWM022**
A	Gas piping for indoor unit	Rotalock	Ø22 F
B	Liquid piping for indoor unit	Rotalock	Ø12 F

OVERALL DIMENSIONS

HiWarm 033 outdoor unit dimensions

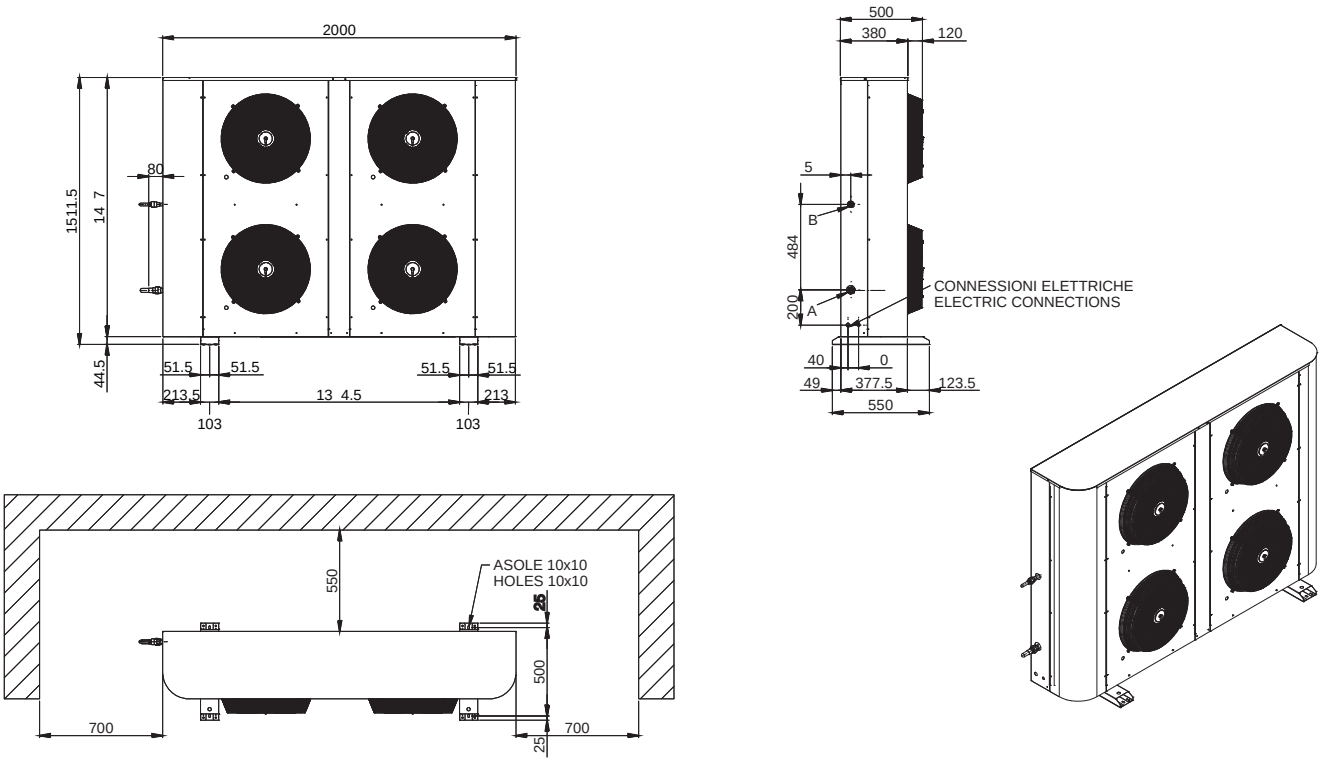

Hidraulic connections			
Ref.	**Connections**	**Type**	**HWM033**
A	Gas piping for indoor unit	Rotalock	Ø22 F
B	Liquid piping for indoor unit	Rotalock	Ø16 F

NOTES

TOTAL HEAT RECOVERY REVERSIBLE AIR/WATER HEAT PUMPS

> HEATING
> AIR CONDITIONING
> COOLING
> COOLING
> DEHUMIDIFICATION
> DOMESTIC HOT WATER
> MAXIMUM ENERGY EFFICIENCY
> TOTAL HEAT RECOVERY
> INTEGRATED HYDRONIC SYSTEM
> SMART DEFROST SYSTEM

MCP MULTI-PURPOSE units are designed for outdoor installation in both residential and industrial applications. The range uses R407C refrigerant, which assures high levels of performance with relatively low energy consumption and features 20 models of varying capacities indicatively from 8 to 40 kW in the cooling mode (9-47 kW in the heating mode) in nominal conditions (ref. EN14511).

The “real” multi-purpose units, with 4 water connections have been designed to cool and heat water for air conditioning and heating systems and for the production of DHW for residential or commercial use.

When reference is made to the production of domestic hot water, what is meant is the storage of thermal energy in a tank of “technical” water.
Passing through a s/s coil contained inside the tank, water for domestic use is instantly heated. In this way it is possible to avoid storing domestic water and it is not necessary to provide for an anti-Legionella cycle (see recommended plumbing layouts for further details).

MCP units are NOT suitable for use as “rapid” heaters.

CONSTRUCTIVE FEATURES

Painted galvanised sheet steel structure (RAL9002) for an attractive look and effective resistance to corrosive agents.

Fastening devices are made of non-oxidizable materials, or carbon steel that has undergone surface-passivating treatments.

The compressor compartment is completely sealed and may be accessed on 3 sides thanks to easy-to-remove panels that greatly simplify maintenance and/or inspection.

Access to the compressor compartment is possible without removing the connection to the water circuit.
Sound insulation, available on request, can further reduce the noise emissions of the unit.

CUSTOMISED HYDRONIC KITS

- High head pump made entirely of stainless steel, already configured for use with mixtures of water and ethylene glycol up to 35% and provided with internal thermal protection.
  It is housed in the compressor compartment and is easy to reach thanks to the removable perimeter panels.
  The units can be equipped with two circulation pumps, one for the system side and one for the DHW side, and both pumps can be controlled by the onboard compressor..
- As an option it is possible to equip the unit with an inertial buffer tank, system side, that is particularly useful during a defrost cycle in particular when it is connected to low thermal inertia distribution units.
- Expansion tank
- Safety valve
- Filling cock (included)
- Automatic vent valve
- Water differential pressure switch and outlet water temperature probe with anti-freeze thermostat function
- Mechanical Y filter supplied as a standard feature on all models to protect the evaporator (included)

Electronic pumps with permanent magnets motors are available as option which are able to improve efficiency and guarantee an optimal modulation on the whole working range and the accurate control of inlet temperature

COOLING CIRCUIT

- Scroll-type compressor, optimised for heat pump applications, with R407C refrigerant , housed in a compartment that can be sound insulated
- Brazed plate heat exchanger made of stainless steel
- Finned block condenser with 9.52 mm copper piping and aluminium fins, characterised by ample heat exchange surfaces
- Dehydrating filter
- Flow indicator with humidity indicator
- Electronic thermostatic valve with advanced drivers and integrated MOP function
- Solenoid valves for managing the different operating modes of refrigerating cycles
- One-way valves
- Liquid receiver
- High and low pressure switches
- Schrader valves for checks and/or maintenance
- Refrigerant pressure gauges (optional)

FAN DRIVE ASSEMBLY

Electric fan with 6/8-pole external rotor motor directly keyed to the axial fan, with internal thermal protection on the windings, complete with safety grille and dedicated supporting structure.
The fan is housed in a special compartment having a profile designed to optimise ventilation.
The use of finned block heat exchangers of large surface reduces pressure drops on the air side, thus significantly improving the noise levels of the units.
The condensation control system continuously and automatically regulates the fan speed, further limiting the noise emissions of the unit during nighttime operation and under partial load conditions.
The pressure control is active also during DHW production as evaporation control in order to guarantee an optimal performance of the unit in all seasons.
EC electronic fans with permanent magnets motors are available as option, which are able to improve efficiency levels and guarantee an optimal modulation on the whole working range.

FINNED BLOCK HEAT EXCHANGER

Made of 9.52mm diameter copper pipes and aluminium fins, sized to guarantee maximum efficiency.
The special engineering of the heat exchangers allows defrost cycles to be carried out at maximum speed in the models with heat pump operation, which brings clear benefits in terms of the integrated efficiency of the whole cycle.

ELECTRONIC MICROPROCESSOR CONTROL

The electronic control enables the complete control of the MCP unit. It can be easily accessed through a polycarbonate flap with IP65 protection rating.
The microprocessor control is the heart of the unit and the multi-purpose system.
It is used to govern a 4 connection unit, i.e. two completely independent hydraulic circuits : on one side we have hot/chilled water production for room heating/cooling and DHW production on the other side.
Regardless of the unit configuration, the controller can govern the most suitable logic to fit the system (e.g. the circulation pumps, system side and/or DHW side can be installed inside the unit or externally, but they are always governed by the control logic through contacts present on the unit control board).
The section connected to the heating system may have an internal and/or external inertial buffer tank or not, whereas the system should always include a tank for the storage of the energy necessary for the production of DHW.
For the priority control of DHW production, the unit is equipped with a temperature sensor to be inserted in a trap of the buffer tank.
The sensor will activate the pump on the DHW side and the production of DHW once the storage temperature falls below the settable threshold value.
As an alternative to a remote temperature probe, a dry contact (to be connected to the electric control board terminals) coming from an external thermostat can be used.
The self-adaptive logic theoretically enables the unit to operate even in systems where the water content is low, without the use of an inertial buffer tank.
In that case, great care should be dedicated to the evaluation of water temperatures on system side, during defrost cycles.
By reading the outdoor air temperature, it can automatically change the setpoint to adapt it to the outdoor load conditions or keep the unit running even in the harshest winter conditions.
The controller can be configured using various serial cards and enables an immediate connection to supervision networks.

Main functions:

- Control over the temperature of the heat exchanger inlet water, system side
- Control over the temperature of the heat exchanger inlet water, DHW side
- Management of DHW production, as a priority
- Management of pump operation, DHW side (if necessary according to the temperature of storage water)
- Defrosting management
- Control of fan speed
- Complete alarm management
- Dynamic control of the setpoint according to the outdoor air temperature
- Connection to an RS485 serial line for supervisory / teleassistance operation
- Option of connecting a remote terminal that duplicates the control functions

Control of the unit devices:

- Compressor
- Fans
- Solenoid valves on the refrigerating circuit
- Water circulation pump
- Antifreeze heating elements
- Alarm signalling relay

ELECTRIC CONTROL BOARD

The electric control board is constructed and wired in accordance with EEC Directive 73/23, Directive 89/336 on electromagnetic compatibility and related standards.
Made of steel sheet, it is also protected by the enclosing panels of the unit.

MCP

Multi-purpose system for condominium or industrial applications from 7 to 41 kW
Package structure with heat pump and air/refrigerant exchanger incorporated in the outdoor unit

RATED TECHNICAL DATA of MCP multi-purpose heat pumps											
MCP		**007M**	**007**	**009M**	**009**	**010M**	**010**	**013M**	**013**	**015**	**018**
Power supply	V-ph-Hz	230-1-50	400-3N-50	230-1-50	400-3N-50	230-1-50	400-3N-50	230-1-50	400-3N-50	400-3N-50	400-3N-50
Cooling mode											
Cooling capacity [1]	kW	7,6	7,6	9,6	9,7	11,1	11,3	13,4	13,6	15,8	19,6
Power input [1]	kW	2,70	2,60	3,35	3,25	3,87	3,77	4,72	4,62	5,55	7,32
EER		3,01	3,14	3,04	3,17	3,04	3,18	3,03	3,15	3,02	2,83
Cooling mode + DHW											
Cooling capacity [1]	kW	7,20	7,30	9,00	9,10	10,60	10,80	12,80	13,00	15,40	18,40
Power input [1]	kW	2,66	2,66	3,38	3,28	3,90	3,80	4,85	4,65	5,48	7,28
DHW Heating capacity	kW	9,48	9,58	11,95	11,95	14,02	14,13	16,98	16,99	20,15	24,77
Total COP		6,18	6,26	6,14	6,35	6,27	6,51	6,07	6,37	6,41	5,88
Heating mode (system / DHW)											
Heating capacity [2]	kW	8,9	8,8	11,1	11,2	12,6	12,7	15,6	15,7	18,1	23,3
Power input [2]	kW	2,90	2,80	3,75	3,55	4,17	4,07	5,12	5,02	5,75	7,72
COP		3,13	3,20	3,02	3,19	3,07	3,18	3,10	3,18	3,19	3,06
Water flow - chiller mode	l/h	1.307	1.307	1.651	1.668	1.909	1.944	2.305	2.339	2.718	3.371
Water flow - heat pump mode	l/h	1.527	1.510	1.916	1.918	2.171	2.189	2.680	2.698	3.105	4.002
DHW water flow	l/h	1.631	1.648	2.055	2.055	2.411	2.430	2.921	2.922	3.466	4.260
Pump head, system side (chiller)	kPa	142	142	125	124	121	119	142	140	128	129
Pump head, DHW side	kPa	123	122	98	98	88	86	109	108	79	94
No. of scroll compressors / circuits		1/1	1/1	1/1	1/1	1/1	1/1	1/1	1/1	1/1	1/1
Diameter of water connections	inches	1” 1/4	1” 1/4	1” 1/4	1” 1/4	1” 1/4	1” 1/4	1” 1/4	1” 1/4	1” 1/4	1” 1/4
Tank capacity	dm^3	30	30	30	30	30	30	30	30	30	50
Height	mm	1.224	1.224	1.224	1.224	1.224	1.224	1.224	1.224	1.224	1.273
Length	mm	1.324	1.324	1.324	1.324	1.324	1.324	1.324	1.324	1.324	1.665
Depth	mm	560	560	560	560	560	560	560	560	560	655
Sound power level	dB(A)	72	72	75	75	75	75	75	75	75	78
Ref. R407C	(kg)	6,3	6,3	6,3	6,3	6,5	6,5	7,4	7,4	8,3	10,8

RATED TECHNICAL DATA of MCP multi-purpose heat pumps											
MCP		**027**	**032**	**040**	**T18M**	**T18**	**T22M**	**T22**	**T24M**	**T24**	**T30**
Power supply	V-ph-Hz	400-3N-50	400-3N-50	400-3N-50	230-1-50	400-3N-50	230-1-50	400-3N-50	230-1-50	400-3N-50	400-3N-50
Cooling mode											
Cooling capacity [1]	kW	27,4	34,4	40,4	18,6	18,8	21,4	21,6	26,0	26,4	32,4
Power input [1]	kW	10,00	11,92	14,74	6,72	6,52	7,75	7,55	9,79	9,29	10,73
EER		2,89	3,09	2,91	2,94	3,07	2,93	3,04	2,81	3,01	3,18
Cooling mode + DHW											
Cooling capacity [1]	kW	27,10	32,90	39,40	17,40	17,60	20,20	20,60	25,40	25,80	30,80
Power input [1]	kW	9,66	11,98	14,60	6,98	6,78	8,01	7,61	9,45	9,25	10,89
DHW Heating capacity	kW	35,65	43,45	52,42	23,48	23,49	27,23	27,25	33,76	33,97	40,49
Total COP		6,48	6,40	6,33	5,81	6,01	5,89	6,25	6,26	6,45	6,54
Heating mode (system / DHW)											
Heating capacity [2]	kW	31,4	40,0	47,4	22,3	22,1	25,0	25,2	30,2	30,4	37,5
Power input [2]	kW	9,90	12,52	15,04	7,52	7,32	8,55	8,35	9,99	9,79	11,53
COP		3,22	3,25	3,20	3,01	3,07	2,97	3,07	3,07	3,15	3,29
Water flow - chiller mode	l/h	4.713	5.917	6.949	3.199	3.234	3.681	3.715	4.472	4.541	5.573
Water flow - heat pump mode	l/h	5.395	6.871	8.157	3.832	3.799	4.305	4.341	5.188	5.224	6.448
DHW water flow	l/h	6.132	7.473	9.015	4.039	4.040	4.684	4.687	5.807	5.843	6.964
Pump head, system side (chiller)	kPa	119	144	131	136	135	133	132	127	125	106
Pump head, DHW side	kPa	72	115	89	105	105	99	99	85	84	60
No. of scroll compressors / circuits		1/1	1/1	1/1	2/1	2/1	2/1	2/1	2/1	2/1	2/1
Diameter of water connections	inches	1” 1/4	1” 1/4	1” 1/4	1” 1/4	1” 1/4	1” 1/4	1” 1/4	1” 1/4	1” 1/4	1” 1/4
Tank capacity	dm^3	50	125	125	50	50	50	50	50	50	125
Height	mm	1.273	1.489	1.489	1.273	1.273	1.273	1.273	1.273	1.273	1.489
Length	mm	1.665	2.065	2.065	1.665	1.665	1.665	1.665	1.665	1.665	2.065
Depth	mm	655	951	951	863	863	863	863	863	863	951
Sound power level	dB(A)	78	78	78	78	78	78	78	78	78	78
Ref. R407C	(kg)	11,5	16,0	18,0	11,5	11,5	11,5	11,5	11,5	11,5	14,0

1 Water temperature 12°C - 7°C; outdoor air temperature 35°C
2 Water temperature 40°C - 45°C, outdoor air temperature 7°C dry bulb, outdoor air temperature 6°C wet bulb
Performances measured according to standard EN 14511

OVERALL DIMENSIONS MCP 07 - MCP 15

Legend:

1 1" 1/4 female System water inlet
2 1" 1/4 female Domestic hot water inlet
3 1" 1/4 female System water outlet
4 1" 1/4 female Domestic hot water outlet
5 Safety valve discharge outlet provided with rubber ring holder
6 1/2" male Water supply (optional tap)
7 1/2" female System water drainage
8 1/2" female Domestic hot water drainage
9 Power supply diameter 28 mm
10 Electric panel
11 Fastening points for vibration dampers

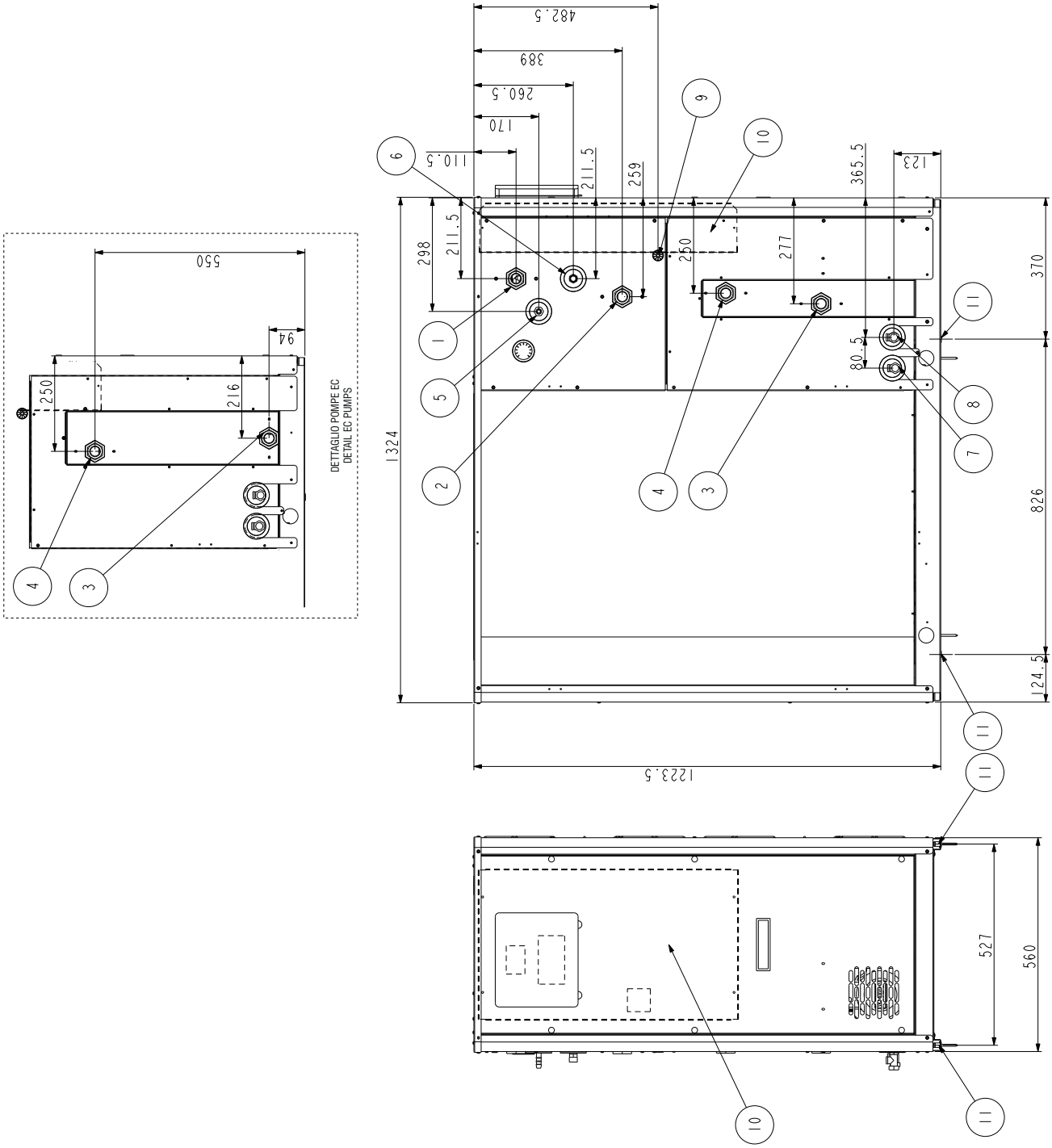

OVERALL DIMENSIONS MCP 18 - MCP 27

Legend:

1 1" $^1/_4$ female System water inlet
2 1" $^1/_4$ female Domestic hot water inlet
3 1" $^1/_4$ female System water outlet
4 1" $^1/_4$ female Domestic hot water outlet
5 Safety valve discharge outlet provided with rubber ring holder
6 $^1/_2$" male Water supply (optional tap)
7 $^1/_2$" female System water drainage
8 $^1/_2$" female Domestic hot water drainage
9 Power supply diameter 28 mm
10 Electric panel
11 Fastening points for vibration dampers

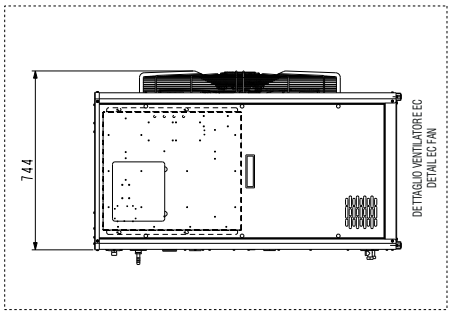

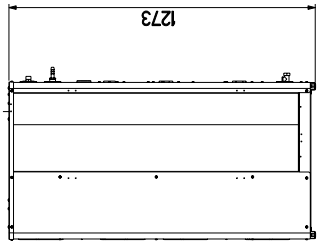

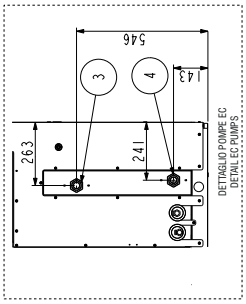

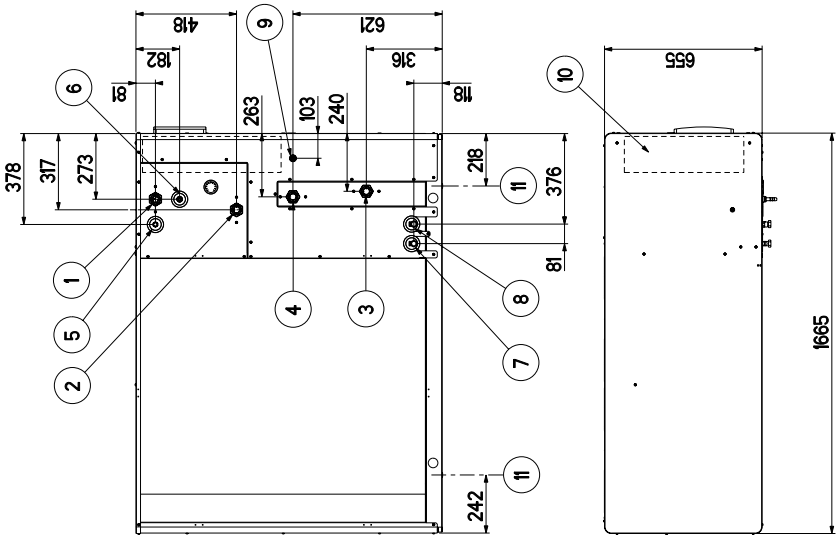

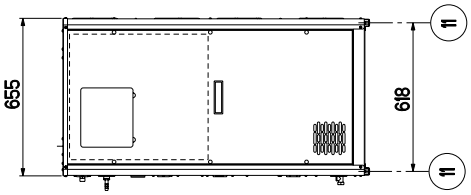

OVERALL DIMENSIONS MCP 18T - MCP 24T

Legend:

1 1" 1/4 female System water inlet
2 1" 1/4 female Domestic hot water inlet
3 1" 1/4 female System water outlet
4 1" 1/4 female Domestic hot water outlet
5 Safety valve discharge outlet provided with rubber ring holder
6 1/2" male Water supply (optional tap)
7 1/2" female System water drainage
8 1/2" female Domestic hot water drainage
9 Power supply diameter 28 mm
10 Electric panel
11 Fastening points for vibration dampers

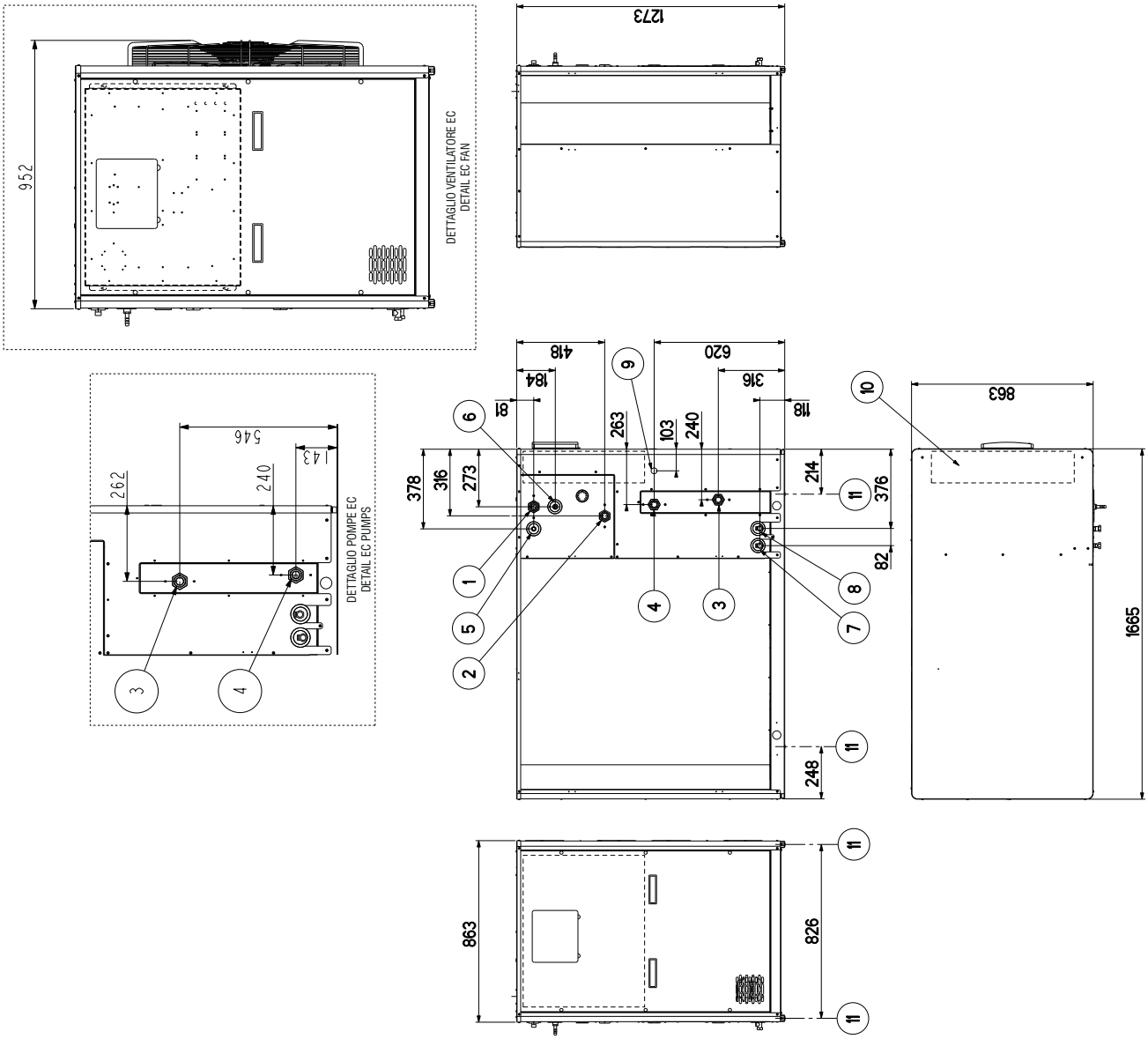

Multi-purpose units (ON/OFF or modulating) and heat pumps, generally speaking, are NOT suitable for use as "rapid" heaters, this means that thermal storage for the production of DHW should be provided in any case.

When reference is made to the production of domestic hot water, what is meant is the storage of thermal energy in a tank of “technical” water. Water for domestic use must be heated by means of a stainless steel coil contained inside the storage tank or a plate exchanger outside the tank; in this way it is possible to avoid storing domestic water and it is not necessary to provide for an anti-Legionella cycle (see recommended plumbing layouts for further details).

If you wish to consider the DHW storage option, the storage tank should be suitable for the storage of drinking water and equipped with a coil (connected to the multi-purpose unit) having a surface designed to allow heat exchange fit for the unit capacity, based on its working temperature and DHW storage temperatures within the storage tank.

Please note that DHW system should in no case be in contact with the water circuit of heat pumps units (a separation should always be provided).

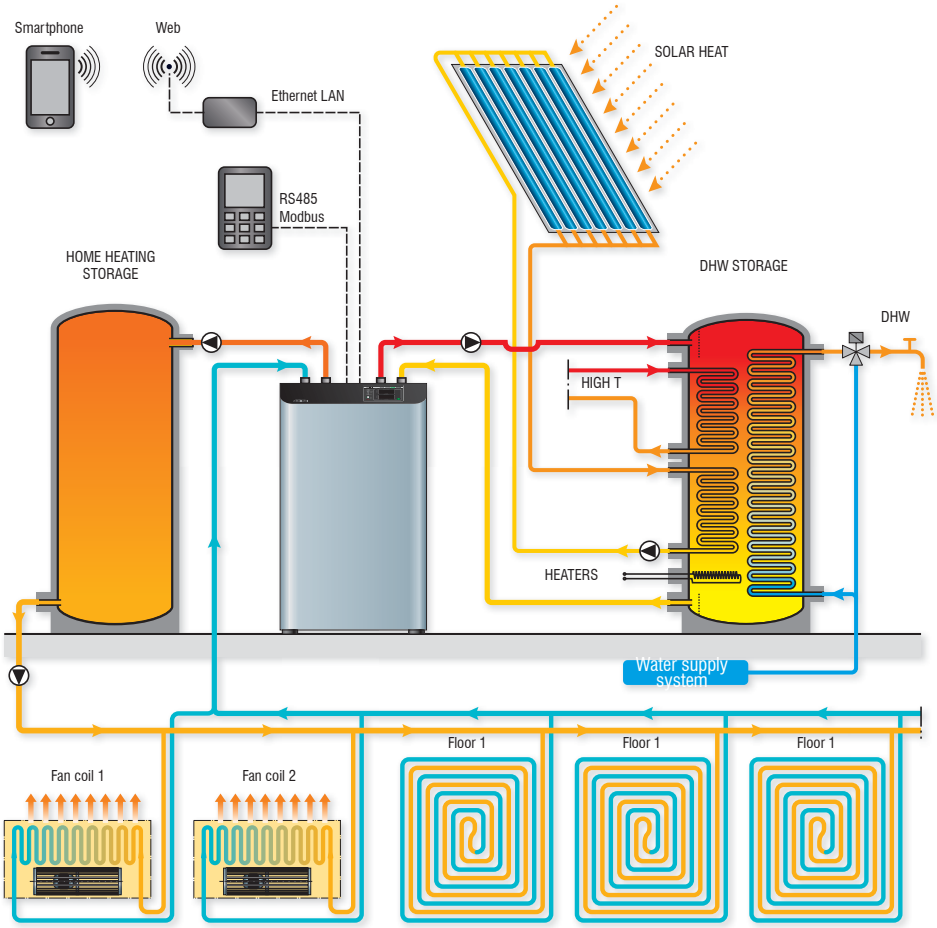

GALLETTI THERMAL STORAGE TANKS FOR THE PRODUCTION OF DHW BY CORDIVARI

Galletti introduces its new range of thermal storage tanks for the production of domestic hot water developed in partnership with Cordivari and specifically conceived for pairing with heat pumps.

This range of products combines the proven experience of Galletti in heat pumps and control logics of multi-purpose systems to the experience of Cordivari in the development of tanks.

Galletti decided to favour the thermal storage tank solution (i.e. storage of technical water within a tank) instead of the boiler solution (domestic hot water storage).

As technical water is stored, it is not necessary to provide for an anti-Legionella cycle usually carried out by means of thermal shock (causing lowering of system efficiency) or chemical treatment.

The range features two lines of products. The first one is made up of stainless steel coil for the instantaneous production of domestic warm water.

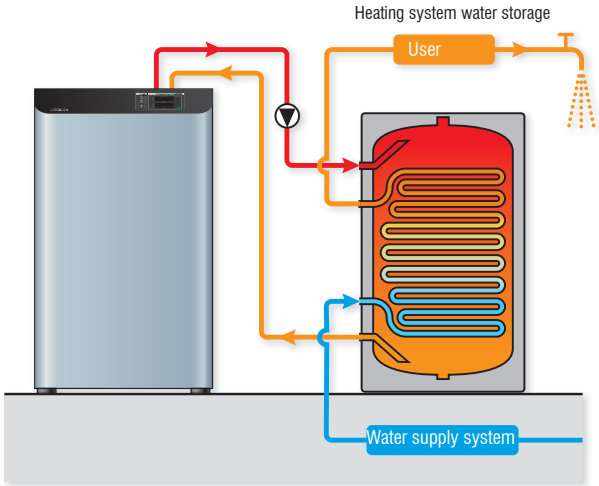

The second line of products is made up of thermal storage tanks associated with an external plate exchanger for the instantaneous production of hot water.

In order to develop a product that perfectly meets the requirements of multi-purpose systems installed in combination with heat pumps, Galletti and Cordivari conducted a careful study on heat exchange surfaces and stratification: the result is a range of tanks which in terms of coils and plate exchangers feature exchange surfaces that are on average much larger than those of the traditional thermal storage tanks available on the market.

The Labyrinth Diffuser (patented) has been mounted as a standard feature on all models in order to guarantee optimal stratification in all situations, including transients that may impair the storage tank performances.

All models of this range are available in a basic and a two additional coils versions as solar auxiliary system and high T source.

As part of its commitment to always improving system energy efficiency, Galletti does not use electric heating elements inside its heat pumps or tanks as auxiliary heating source.

The heating elements can be used on Galletti thermal storage tanks only as back-up in case of temporary stop of heat pump.

These thermal storage tanks are the perfect complement to the offer of multi-purpose systems by Galletti who for years has been offering MCP and HiWarm multi-purpose units.

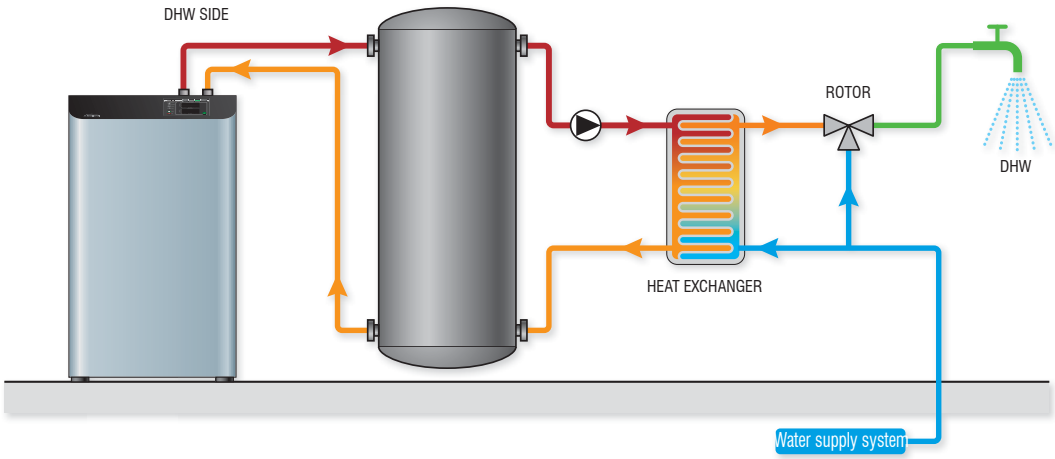

Tank type: thermal storage tank for the production of domestic hot water

Liquid stored: water for heating system

DHW production system: stainless steel quick coil

CAPACITY	CODE	NET STORAGE VOLUME	DOMESTIC WATER CIRCUIT VOLUME	SURFACE AREA OF CORRUGATED COIL	WEIGHT
[l]		[l]	[l]	[m²]	[kg]
300	RYTN 300	302,0	7,2	3,5	62
600	RYTN 600	525,8	32,2	5,5	95
800	RYTN 800	760,0	45,5	7,8	120

THERMAL STORAGE TANK		DHW COIL
Pmax	Tmax	Pmax
3 bar	99° C	6 bar

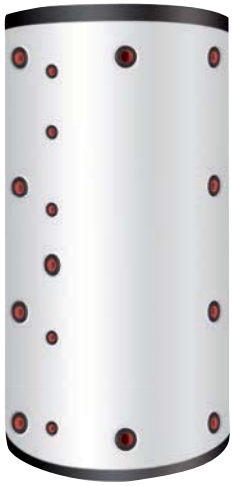

The figure shows the connection layout of 600 and 800 litre models

INTENDED USE

Production of domestic hot water (DHW) using "renewable" heat sources, such as heat pumps.
RYTN storage tanks are designed to store heating system water. Domestic water is made to pass inside a stainless steel corrugated coil.
Inside the thermal storage tank, at the connections used for the heat pump, there is a Labyrinth Diffuser (patented system). This element makes it possible to maintain the stratification regardless of the connection used for the inlet technical water coming from the heat pump.

NOTE: Do not use the thermal storage tank to store domestic hot water It is recommended to use this thermal storage tank for the production of sanitary hot water only and not as auxiliary heating source on system side. In this case, the use of a dedicated tank is recommended.

MATERIALS AND FINISHES

- Thermal storage tank made of carbon steel, unfinished on the inside, painted on the outside
- 316L stainless steel corrugated coil for the domestic water circuit.

INSULATION

- For 300l size: rigid polyester foam insulating layer, thickness 70mm, with a high level of heat insulation and conductivity coefficient of 0.023W/mK.
- For 600l and 800l sizes: polyester fibre insulating layer, thickness 100 mm, with a high level of heat insulation and conductivity coefficient of 0.035 W/mK. Fire resistance class B-s2d0 according to standard EN 13501
- Grey PVC exterior coating complete with upper PVC cover

WITHDRAWAL DATA

RYTN 300	P = 0 kW		P = 5 kW		P = 10 kW		P = 15 kW	
	Q (l/min)	V (l)	Q (l/min)	V (l)	Q (l/min)	V (l)	Q (l/min)	V (l)
DHW 10C°/45C° Initial T storage 50C°	10	118	10	142	10	166	10	191
	20	83	20	91	20	100	20	108
	30	48	30	51	30	54	30	57
DHW 10C°/45C° Initial T storage 50C°	10	96	10	116	10	135	10	155
	20	67	20	74	20	81	20	88
	30	39	30	42	30	44	30	47

RYTN 600	P = 0 kW		P = 5 kW		P = 10 kW		P = 15 kW		P = 20 kW		P = 25 kW	
	Q (l/min)	V (l)	Q (l/min)	V (l)	Q (l/min)	V (l)	Q (l/min)	V (l)	Q (l/min)	V (l)	Q (l/min)	V (l)
DHW 10C°/45C° Initial T storage 50C°	10	293	10	353	10	413	10	473	10	533	10	593
	20	223	20	246	20	269	20	291	20	314	20	337
	30	153	30	163	30	174	30	184	30	195	30	205
DHW 10C°/45C° Initial T storage 50C°	10	240	10	289	10	338	10	387	10	436	10	485
	20	182	20	201	20	220	20	238	20	257	20	276
	30	125	30	134	30	142	30	151	30	159	30	168

RYTN 800	P = 0 kW		P = 15 kW		P = 20 kW		P = 25 kW		P = 30 kW		P = 35 kW	
	Q (l/min)	V (l)	Q (l/min)	V (l)	Q (l/min)	V (l)	Q (l/min)	V (l)	Q (l/min)	V (l)	Q (l/min)	V (l)
DHW 10C°/45C° Initial T storage 50C°	10	469	10	757	10	853	10	949	10	1045	10	1141
	20	367	20	480	20	517	20	555	20	592	20	630
	30	266	30	320	30	339	30	357	30	375	30	393
DHW 10C°/45C° Initial T storage 50C°	10	384	10	619	10	698	10	777	10	855	10	934
	20	300	20	392	20	423	20	454	20	485	20	515
	30	218	30	262	30	277	30	292	30	307	30	322

Q = flow rate of domestic hot water withdrawn from the coil in l/min
P = power in kW of the connected heat pump under the conditions considered (e.g. outdoor T)
V = maximum quantity of DHW that can be produced under the specified conditions

RYTN 300

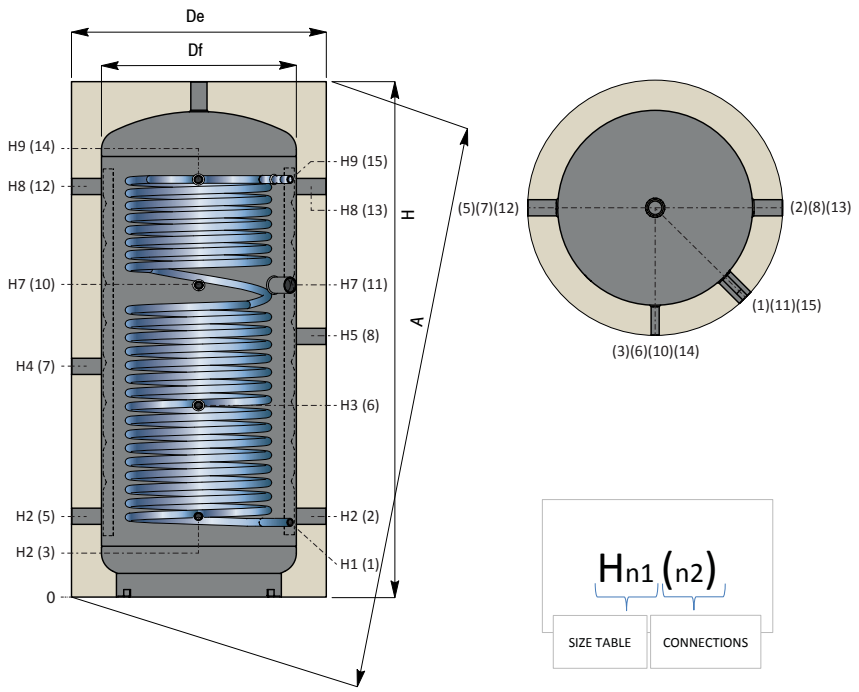

	CONNECTIONS
1	Domestic water inlet - 1" Gas M
2-5	Return to heat pump
3	Probe - 1/2" Gas F
6	Probe - 1/2" Gas F
7	Inlet for heating system water from heat pump* - 1"1/2 Gas F
8	Return to Generator* - 1"1/2 Gas F
10	Probe - 1/2" Gas F
11	Backup heating element - 1"1/2 Gas F
12-13	Inlet for heating system water from heat pump / from Generator* - 1"1/2 Gas F
14	Probe - 1/2" Gas F
15	Domestic water outlet - 1" Gas F

* in the presence of a second high temperature generator that works directly on the upper part of the storage tank

It is recommended not to use the connection on the top of tank for the delivery from a heat pump or a high temperature generator to avoid any stratification spoiling.

It is recommended to use this thermal storage tank for the production of sanitary hot water only and not as auxiliary heating source on system side. In this case, the use of a dedicated tank is recommended.

RYTN 600 - RYTN 800

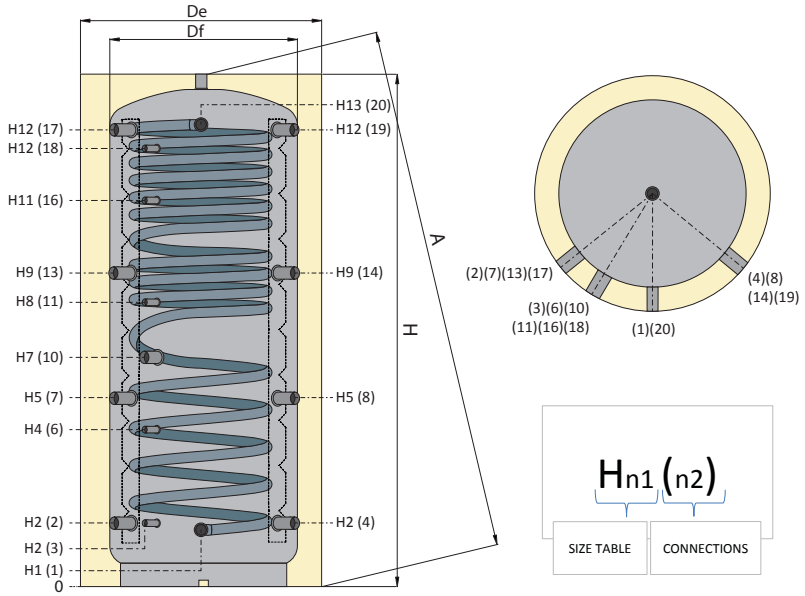

	CONNECTIONS
1	Domestic water inlet - 1" Gas M
2-4	Return to heat pump
3	Probe - 1/2" Gas F
6	Probe - 1/2" Gas F
7-8	Inlet for heating system water from heat pump* - 1"1/2 Gas F
10	Backup heating element - 1"1/2 Gas F
11	Probe - 1/2" Gas F
13-14	Return to Generator* - 1"1/2 Gas F
16	Probe - 1/2" Gas F
17-19	Inlet for heating system water from heat pump / from Generator* - 1"1/2 Gas F
18	Probe - 1/2" Gas F
20	Domestic water outlet - 1" Gas M

* in the presence of a second high temperature generator that works directly on the upper part of the storage tank

It is recommended not to use the connection on the top of tank for the delivery from a heat pump or a high temperature generator to avoid any stratification spoiling.

It is recommended to use this thermal storage tank for the production of sanitary hot water only and not as auxiliary heating source on system side. In this case, the use of a dedicated tank is recommended.

SIZE TABLE

Capacity	Df	De	H	A	H1	H2	H3	H4	H5	H6	H7	H8	H9	H10	H11	H12	H13
[litres]	[mm]																
300	550	690	1521	1670	233	266	581	766	866	-	906	1216	1251	-	-	-	-
600	650	850	1920	1945	230	247	-	582	695	-	915	1060	1144	-	1382	1593	1610
800	790	990	1890	1925	248	265	-	584	690	-	838	988	1115	-	1332	1541	1558

This series of thermal storage tanks, fruit of a partnership combining the experience of Galletti and Cordivari, was specifically conceived for pairing with heat pumps.

Storage type: thermal storage tank for the production of domestic hot water

Liquid stored: water for heating system

DHW production system: stainless steel quick coil

Additional coils: a solar thermal coil and high temperature coil

CAPACITY	CODE	NET STORAGE VOLUME	DOMESTIC WATER CIRCUIT VOLUME	SURFACE AREA OF CORRUGATED COIL	VOLUME OF LOWER FIXED COIL	SURFACE AREA OF LOWER FIXED COIL	VOLUME OF UPPER FIXED COIL	SURFACE AREA OF UPPER FIXED COIL	WEIGHT
[l]		[l]	[l]	[m²]	[l]	[m²]	[l]	[m²]	[kg]
300	RYTNSH 300	288,3	7,2	3,5	7,8	1,2	5,9	0,9	85
600	RYTNSH 600	501.8	32.2	5,5	13	2	8	1,25	132
800	RYTNSH 800	728	45,5	7,8	16,3	2,5	11,8	1,8	169

THERMAL STORAGE TANK		DHW COIL	SOLAR AND HIGH TEMPERATURE COIL	
Pmax	Tmax	Pmax	Pmax	Pmax
3 bar	99° C	6 bar	12 bar	110° C

INTENDED USE

Production of domestic hot water (DHW) using "renewable" heat sources, such as heat pumps.
RYTNSH thermal storage tanks are provided with additional charging coils to enable use of heat originating from solar thermal panels or other high temperature sources of heat such as, for example, fireplace heaters, biomass generators, etc.
Inside the thermal storage tank, at the connections used for the heat pump, there is a Labyrinth Diffuser (patented system). This element makes it possible to maintain the stratification regardless of the connection used for the inlet technical water coming from the heat pump.
NOTE: RYTNSH storage tanks are designed to store solely heating system water. Domestic water is made to pass inside a stainless steel corrugated coil. Do not use the thermal storage tank to store domestic hot water.

MATERIALS AND FINISHES

- Thermal storage tank made of carbon steel, unfinished on the inside, painted on the outside
- 316L stainless steel corrugated coil for the domestic water circuit.

INSULATION

- For 300l size: rigid polyester foam insulating layer, thickness 70mm, with a high level of heat insulation and conductivity coefficient of 0.023W/mK.
- For 600l and 800l sizes: polyester fibre insulating layer, thickness 100 mm, with a high level of heat insulation and conductivity coefficient of 0.035 W/mK. Fire resistance class B-s2d0 according to standard EN 13501
- Grey PVC exterior coating complete with upper PVC cover

HEAT EXCHANGER

2 fixed carbon steel coils for solar thermal and high temperature systems

The figure shows the connection layout of 600 and 800 litre models

It is recommended to use this thermal storage tank for the production of sanitary hot water only and not as auxiliary heating source on system side. In this case, the use of a dedicated tank is recommended.

WITHDRAWAL DATA*

RYTNSH 300	P = 0 kW		P = 5 kW		P = 10 kW		P = 15 kW	
	Q (l/min)	V (l)	Q (l/min)	V (l)	Q (l/min)	V (l)	Q (l/min)	V (l)
DHW 10C°/45C° Initial T storage 50C°	10	118	10	142	10	166	10	191
	20	83	20	91	20	100	20	108
	30	48	30	51	30	54	30	57
DHW 10C°/45C° Initial T storage 50C°	10	96	10	116	10	135	10	155
	20	67	20	74	20	81	20	88
	30	39	30	42	30	44	30	47

RYTNSH 600	P = 0 kW		P = 5 kW		P = 10 kW		P = 15 kW		P = 20 kW		P = 25 kW	
	Q (l/min)	V (l)	Q (l/min)	V (l)	Q (l/min)	V (l)	Q (l/min)	V (l)	Q (l/min)	V (l)	Q (l/min)	V (l)
DHW 10C°/45C° Initial T storage 50C°	10	293	10	353	10	413	10	473	10	533	10	593
	20	223	20	246	20	269	20	291	20	314	20	337
	30	153	30	163	30	174	30	184	30	195	30	205
DHW 10C°/45C° Initial T storage 50C°	10	240	10	289	10	338	10	387	10	436	10	485
	20	182	20	201	20	220	20	238	20	257	20	276
	30	125	30	134	30	142	30	151	30	159	30	168

RYTNSH 800	P = 0 kW		P = 15 kW		P = 20 kW		P = 25 kW		P = 30 kW		P = 35 kW	
	Q (l/min)	V (l)	Q (l/min)	V (l)	Q (l/min)	V (l)	Q (l/min)	V (l)	Q (l/min)	V (l)	Q (l/min)	V (l)
DHW 10C°/45C° Initial T storage 50C°	10	469	10	757	10	853	10	949	10	1045	10	1141
	20	367	20	480	20	517	20	555	20	592	20	630
	30	266	30	320	30	339	30	357	30	375	30	393
DHW 10C°/45C° Initial T storage 50C°	10	384	10	619	10	698	10	777	10	855	10	934
	20	300	20	392	20	423	20	454	20	485	20	515
	30	218	30	262	30	277	30	292	30	307	30	322

Q = flow rate of domestic hot water withdrawn from the coil in l/min
P = power in kW of the connected heat pump under the conditions considered (e.g. outdoor T)
V = maximum quantity of DHW that can be produced under the specified conditions
* withdrawal data refer only to the use of heat pump and not to a solar thermal source or other high temperature sources.

RYTNSH 300

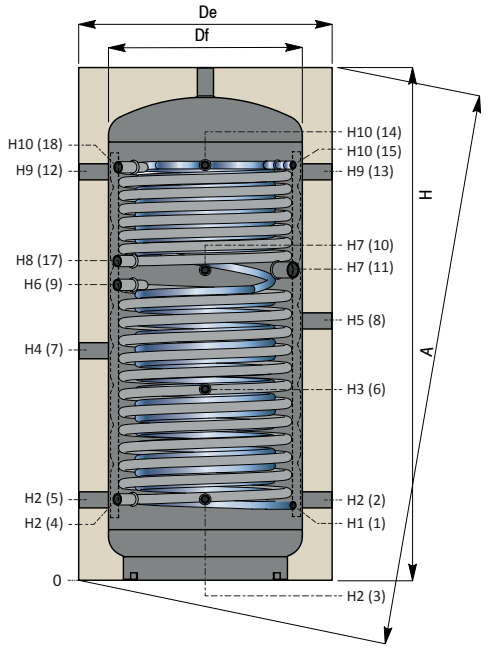

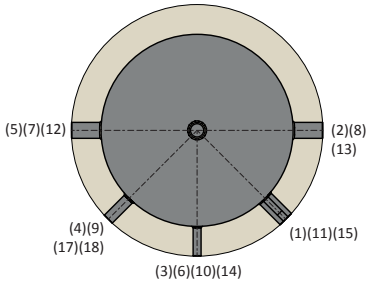

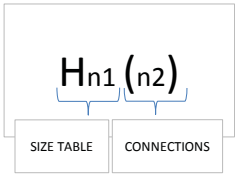

	CONNECTIONS
1	Domestic water inlet - 1/2" Gas F
2-5	Return to heat pump - 1"1/2 Gas F
3	Probe - 1/2" Gas F
4	Lower fixed coil outlet - 1" Gas F
6	Probe - 1/2" Gas F
7	Inlet for heating system water from heat pump* - 1"1/2 Gas F
8	Return to Generator* - 1"1/2 Gas F
9	Lower fixed coil outlet - 1" Gas F
10	Probe - 1/2" Gas F
11	Backup heating element - 1"1/2 Gas F
12-13	Inlet for heating system water from heat pump / from Generator* - 1"1/2 Gas F
14	Probe - 1/2" Gas F
15	Domestic water outlet - 1/2" Gas F
17	Upper fixed coil outlet - 1" Gas F
18	Upper fixed coil inlet - 1" Gas F

* in the presence of a second high temperature generator that works directly on the upper part of the storage tank

RYTNSH 600 - RYTNSH 800

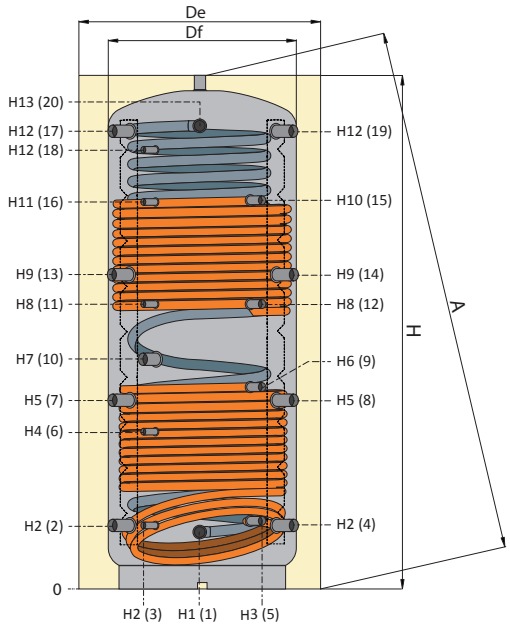

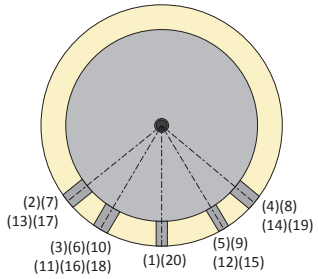

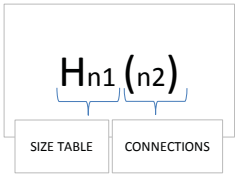

	CONNECTIONS
1	Domestic water inlet - 1" Gas M
2-4	Return to heat pump - 1"1/2 Gas F
3	Probe - 1/2" Gas F
5	Lower fixed coil outlet - 1" Gas F
6	Probe - 1/2" Gas F
7-8	Inlet for heating system water to heat pump* - 1"1/2 Gas F
9	Lower fixed coil outlet - 1" Gas F
10	Backup heating element - 1"1/2 Gas F
11	Probe - 1/2" Gas F
12	Upper fixed coil outlet - 1" Gas F
13-14	Return to Generator* - 1"1/2 Gas F
15	Upper fixed coil inlet - 1" Gas F
16	Probe - 1/2" Gas F
17-19	Inlet for heating system water from heat pump / from Generator* - 1"1/2 Gas F
18	Probe - 1/2" Gas F
20	Domestic water outlet - 1" Gas M

* in the presence of a second high temperature generator that works directly on the upper part of the storage tank

It is recommended not to use the connection on the top of tank for the delivery from a heat pump or a high temperature generator to avoid any stratification spoiling.

SIZE TABLE

Capacity	Df	De	H	A	H1	H2	H3	H4	H5	H6	H7	H8	H9	H10	H11	H12	H13
[litres]	[mm]																
300	550	690	1521	1579	233	266	581	766	866	806	976	906	1216	1251	-	-	-
600	650	850	1920	1945	230	247	260	582	695	855	915	1060	1144	1361	1382	1593	1610
800	790	990	1890	1925	248	265	278	584	690	762	823	988	1115	1332	1332	1541	1558

This series of thermal storage tanks, fruit of a partnership combining the experience of Galletti and Cordivari, was specifically conceived for pairing with heat pumps.

Tank type: thermal storage tank for the production of domestic hot water

Liquid stored: water for heating system

Method of DHW production: external module with stainless steel plate heat exchanger

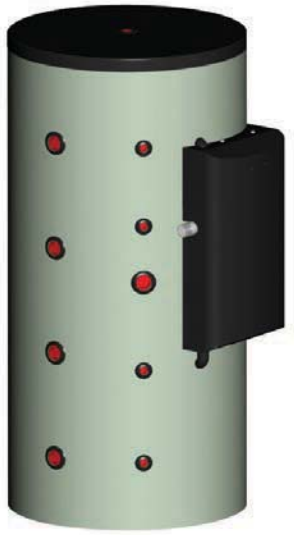

RYTP Series

CAPACITY	CODE	NET STORAGE VOLUME	MAX POWER OF DHW MODULE	WEIGHT
[l]		[l]	kW	[kg]
300	RYTP 300	286	120*	106
500	RYTP 500	505	120*	131
800	RYTP 800	803	120*	152

* =maximum power referred to a storage temperature of 80°C

THERMAL STORAGE TANK		STAINLESS STEEL PLATE HEAT EXCHANGER	
Pmax	Tmax	Pmax	Tmax
3 bar	99° C	6 bar	99° C

INTENDED USE

Production of domestic hot water (DHW) using "renewable" heat sources, such as heat pumps.

RYTP storage tanks are designed to store heating system water. Domestic water is made to pass inside a stainless steel plate heat exchanger.

NOTE: RYTP storage tanks are designed to store solely heating system water. Do not use the thermal storage tank to store domestic hot water.

MATERIALS AND FINISHES

Thermal storage tank made of carbon steel, unfinished on the inside, painted on the outside.
Heat exchanger: external module with a 316L stainless steel plate heat exchanger for the production of domestic hot water

INSULATION

- Polyester fibre insulating layer, thickness 100 mm, with a high level of heat insulation and conductivity coefficient of 0.035 W/mK Fire resistance class B-s2d0 according to standard EN 13501
- Grey PVC exterior coating complete with upper PVC cover
- External module clad in painted sheet metal and insulated on the inside

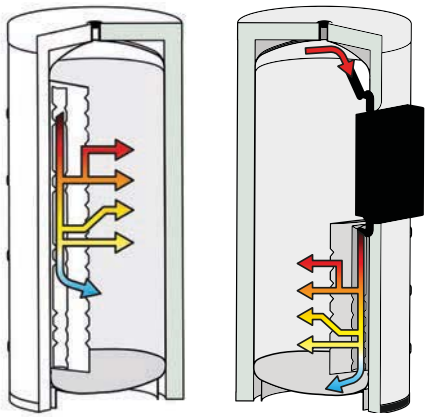

- **Thermal storage tank:** reservoir of heating system water acting as a thermal flywheel. Inside the thermal storage tank there are a labyrinth diffuser (patented system) on the DHW module and two other labyrinth diffusers on both sides of the tank which ensure perfect stratification of technical inlet water coming from the heat pump and of technical outlet water at the instantaneous production module output. The labyrinth diffuser is located on both sides of the storage tank and is arranged so as to make it possible to maintain the stratification regardless of the connection used for the inlet technical water coming from the heat pump.

-**DHW production module:** an external unit that instantly heats domestic water by exploiting the heat stored in the puffer, ensuring hygiene and comfort as well as the possibility of regulating the outlet temperature The module consists of a stainless steel plate exchanger, an on/off pump and a 3-way valve for temperature-controlled pre-mixing on the exchanger inlet (primary side), which prevents excessively high temperatures in the exchanger itself while considerably reducing the risk of limescale build-up.

WITHDRAWAL DATA

RYTP 300	P = 0 kW		P = 5 kW		P = 10 kW		P = 15 kW		P = 20 kW		P = 25 kW	
	Q (l/min)	V (l)	Q (l/min)	V (l)	Q (l/min)	V (l)	Q (l/min)	V (l)	Q (l/min)	V (l)	Q (l/min)	V (l)
DHW 10C°/45C° Initial T storage 50C°	10	334	10	420	10	566	10	866	10	1846	10	infinite
	20	334	20	372	20	420	20	482	20	566	20	684
	26,3	334*	26,3	362*	26,3	396*	26,3	436*	26,3	485*	26,3	547*
DHW 10C°/45C° Initial T storage 50C°	10	264	10	332	10	447	10	684	10	1459	10	infinite
	20	264	20	294	20	332	20	381	20	447	20	541
	21	264	21	293	21	328	21	373	21	433	21	515

Q = flow rate of domestic hot water withdrawn from the coil in l/min
P = power in kW of the connected heat pump under the conditions considered (e.g. outdoor T)
V = maximum quantity of DHW that can be produced under the specified conditions
* = DHW outlet temperature 42.6 °C

WITHDRAWAL DATA

RYTP 500	P = 0 kW		P = 15 kW		P = 20 kW		P = 25 kW		P = 30 kW		P = 35 kW	
	Q (l/min)	V (l)	Q (l/min)	V (l)	Q (l/min)	V (l)	Q (l/min)	V (l)	Q (l/min)	V (l)	Q (l/min)	V (l)
DHW 10C°/45C° Initial T storage 50C°	10	557	10	1444	10	3078	10	infinite	10	infinite	10	infinite
	20	557	20	804	20	943	20	1141	20	1444	20	1966
	26,3	557	26,3	727	26,3	809	26,3	912	26,3	1045	26,3	1224
DHW 10C°/45C° Initial T storage 50C°	10	441	10	1143	10	2437	10	infinite	10	infinite	10	infinite
	20	441	20	636	20	747	20	904	20	1143	20	1556
	21	441	21	623	21	723	21	861	21	1063	21	1389

RYTP 800	P = 0 kW		P = 15 kW		P = 20 kW		P = 25 kW		P = 30 kW		P = 35 kW	
	Q (l/min)	V (l)	Q (l/min)	V (l)	Q (l/min)	V (l)	Q (l/min)	V (l)	Q (l/min)	V (l)	Q (l/min)	V (l)
DHW 10C°/45C° Initial T storage 50C°	10	891	10	2310	10	4924	10	infinite	10	infinite	10	infinite
	20	891	20	1286	20	1509	20	1825	20	231	20	3145
	26,3	891	26,3	1163	26,3	1294	26,3	1459	26,3	1672	26,3	1958
DHW 10C°/45C° Initial T storage 50C°	10	705	10	1828	10	3896	10	infinite	10	infinite	10	infinite
	20	705	20	1018	20	1194	20	1444	20	1828	20	2488
	21	705	21	996	21	1156	21	1376	21	1699	21	2221

Q = flow rate of domestic hot water withdrawn from the coil in l/min
P = power in kW of the connected heat pump under the conditions considered (e.g. outdoor T)
V = maximum quantity of DHW that can be produced under the specified conditions
***** = DHW outlet temperature 42.6 °C

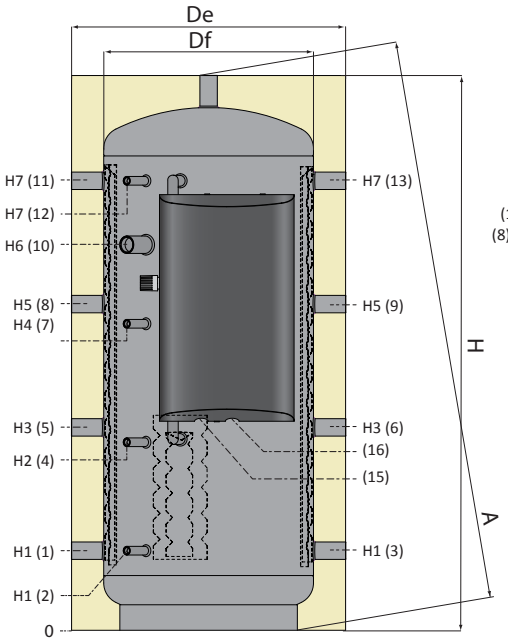

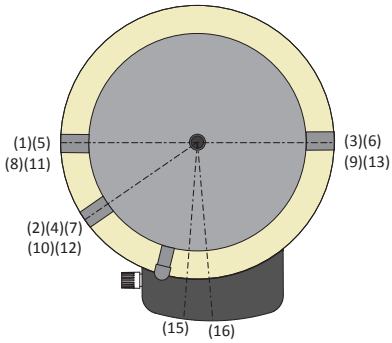

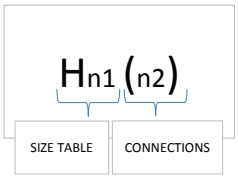

	CONNECTIONS
1-3	Return to heat pump - 1"1/2 Gas F
2	Probe - 1/2" Gas F
4	Probe - 1/2" Gas F
5-6	Inlet for water from heat pump* - 1"1/2 Gas F
7	Probe - 1/2" Gas F
8-9	Return to Generator* - 1"1/2 Gas F
10	Backup heating element - 1"1/2 Gas F
11-13	Inlet for water from heat pump / from Generator* - 1"1/2 Gas F
12	Probe - 1/2" Gas F
15	DHW outlet - 1" Gas M
16	DHW inlet - 1" Gas M

* in the presence of a second high temperature generator that works directly on the upper part of the storage tank

It is recommended not to use the connection on the top of tank for the delivery from a heat pump or a high temperature generator to avoid any stratification spoiling.

It is recommended to use this thermal storage tank for the production of sanitary hot water only and not as auxiliary heating source on system side. In this case, the use of a dedicated tank is recommended.

SIZE TABLE

Capacity	Df	De	H	A	H1	H2	H3	H4	H5	H6	H7
[litres]	[mm]										
300	550	750	1360	1374	232	425	497	625	782	855	1048
500	650	850	1719	1737	247	583	629	950	1011	1195	1393
800	790	990	1888	1915	265	613	690	1038	1115	1338	1541

This series of thermal storage tanks, fruit of a partnership combining the experience of Galletti and Cordivari, was specifically conceived for pairing with heat pumps.

Tank type: thermal storage tank for the production of domestic hot water

Liquid stored: water for heating system

Method of DHW production: external module with stainless steel plate heat exchanger

Additional coils: a solar thermal coil and high temperature coil

CAPACITY	CODE	NET STORAGE VOLUME	MAX POWER OF DHW MODULE	VOLUME OF LOWER FIXED COIL	SURFACE AREA OF LOWER FIXED COIL	VOLUME OF UPPER FIXED COIL	SURFACE AREA OF UPPER FIXED COIL	WEIGHT
[l]		[l]	kW	[l]	[m²]	[l]	[m²]	[kg]
300	RYTPSH 300	278,1	120*	7,6	1,2	4,4	0,7	125
500	RYTPSH 500	483,1	120*	13,5	2,1	6,5	1,25	170
800	RYTPSH 800	774,9	120*	16,3	2,5	13,5	1,8	202

* =maximum power referred to a storage temperature of 80°C

THERMAL STORAGE TANK		SOLAR AND HIGH T. COIL		STAINLESS STEEL PLATE HEAT EXCHANGER	
Pmax	Tmax	Pmax	Tmax	Pmax	Tmax
3 bar	99° C	12 bar	110° C	6 bar	99° C

The figure shows the connection layout of 500 and 800 litre models

INTENDED USE

Production of domestic hot water (DHW) using "renewable" heat sources, such as heat pumps. RYTPSH storage tanks are designed to store heating system water. Domestic water is made to pass inside a stainless steel plate heat exchanger.

RYTPSH thermal storage tanks are provided with additional charging coils to enable use of heat originating from solar thermal panels or other sources of heat such as, for example, fireplace heaters, biomass generators, etc.

NOTE: RYTPSH storage tanks are designed to store solely heating system water. Do not use the thermal storage tank to store domestic hot water.

MATERIALS AND FINISHES

Thermal storage tank made of carbon steel, unfinished on the inside, painted on the outside.
Heat exchanger: external module with a 316L stainless steel plate heat exchanger for the production of domestic hot water

INSULATION

- Polyester fibre insulating layer, thickness 100 mm, with a high level of heat insulation and conductivity coefficient of 0.035 W/mK Fire resistance class B-s2d0 according to standard EN 13501
- Grey PVC exterior coating complete with upper PVC cover
- External module clad in painted sheet metal and insulated on the inside.

HEAT EXCHANGERS

2 fixed carbon steel coils for solar thermal and high temperatures

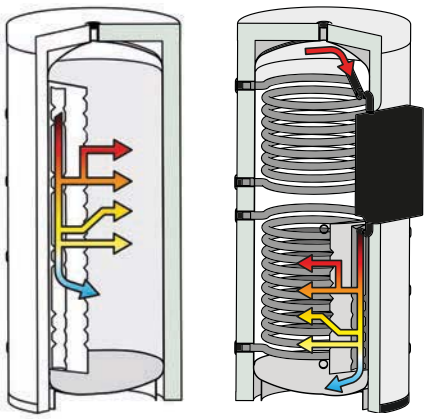

- **Thermal storage tank:** reservoir of heating system water acting as a thermal flywheel. Inside the thermal storage tank there are a labyrinth diffuser (patented system) on the DHW module and two other labyrinth diffusers on both sides of the tank which ensure perfect stratification of technical inlet water coming from the heat pump and of technical outlet water at the instantaneous production module output. The labyrinth diffuser is located on both sides of the storage tank and is arranged so as to make it possible to maintain the stratification regardless of the connection used for the inlet technical water coming from the heat pump.

- **DHW production module:** an external unit that instantly heats domestic water by exploiting the heat stored in the puffer, ensuring hygiene and comfort as well as the possibility of regulating the outlet temperature The module consists of a stainless steel plate exchanger, an on/off pump and a 3-way valve for temperature-controlled pre-mixing on the exchanger inlet (primary side), which prevents excessively high temperatures in the exchanger itself while considerably reducing the risk of limescale build-up.

WITHDRAWAL DATA**

RYTPSH 300	P = 0 kW		P = 5 kW		P = 10 kW		P = 15 kW		P = 20 kW		P = 25 kW	
	Q (l/min)	V (l)	Q (l/min)	V (l)	Q (l/min)	V (l)	Q (l/min)	V (l)	Q (l/min)	V (l)	Q (l/min)	V (l)
DHW 10C°/45C° Initial T storage 50C°	10	334	10	420	10	566	10	866	10	1846	10	infinite
	20	334	20	372	20	420	20	482	20	566	20	684
	26,3	334*	26,3	362*	26,3	396*	26,3	436*	26,3	485*	26,3	547*
DHW 10C°/45C° Initial T storage 50C°	10	264	10	332	10	447	10	684	10	1459	10	infinite
	20	264	20	294	20	332	20	381	20	447	20	541
	21	264	21	293	21	328	21	373	21	433	21	515

Q = flow rate of domestic hot water withdrawn from the coil in l/min
P = power in kW of the connected heat pump under the conditions considered (e.g. outdoor T)
V = maximum quantity of DHW that can be produced under the specified conditions
* = DHW outlet temperature 42.6 °C
** withdrawal data refer only to the use of heat pump and not to a solar thermal source or other high temperature sources.

WITHDRAWAL DATA**

RYTPSH 500	P = 0 kW		P = 15 kW		P = 20 kW		P = 25 kW		P = 30 kW		P = 35 kW	
	Q (l/min)	V (l)	Q (l/min)	V (l)	Q (l/min)	V (l)	Q (l/min)	V (l)	Q (l/min)	V (l)	Q (l/min)	V (l)
DHW 10C°/45C° Initial T storage 50C°	10	557	10	1444	10	3078	10	infinite	10	infinite	10	infinite
	20	557	20	804	20	943	20	1141	20	1444	20	1966
	26,3	557	26,3	727	26,3	809	26,3	912	26,3	1045	26,3	1224
DHW 10C°/45C° Initial T storage 50C°	10	441	10	1143	10	2437	10	infinite	10	infinite	10	infinite
	20	441	20	636	20	747	20	904	20	1143	20	1556
	21	441	21	623	21	723	21	861	21	1063	21	1389

RYTPSH 800	P = 0 kW		P = 15 kW		P = 20 kW		P = 25 kW		P = 30 kW		P = 35 kW	
	Q (l/min)	V (l)	Q (l/min)	V (l)	Q (l/min)	V (l)	Q (l/min)	V (l)	Q (l/min)	V (l)	Q (l/min)	V (l)
DHW 10C°/45C° Initial T storage 50C°	10	891	10	2310	10	4924	10	infinite	10	infinite	10	infinite
	20	891	20	1286	20	1509	20	1825	20	231	20	3145
	26,3	891	26,3	1163	26,3	1294	26,3	1459	26,3	1672	26,3	1958
DHW 10C°/45C° Initial T storage 50C°	10	705	10	1828	10	3896	10	infinite	10	infinite	10	infinite
	20	705	20	1018	20	1194	20	1444	20	1828	20	2488
	21	705	21	996	21	1156	21	1376	21	1699	21	2221

Q = flow rate of domestic hot water withdrawn from the coil in l/min
P = power in kW of the connected heat pump under the conditions considered (e.g. outdoor T)
V = maximum quantity of DHW that can be produced under the specified conditions
* = DHW outlet temperature 42.6 °C
** withdrawal data refer only to the use of heat pump and not to a solar thermal source or other high temperature sources.

	CONNECTIONS
1-3	Return to heat pump - 1"1/2 Gas F
2	Probe - 1/2" Gas F
4	Probe - 1/2" Gas F
5-6	Inlet for water from heat pump* - 1"1/2 Gas F
7	Backup heating element - 1"1/2 Gas F
8-9	Return to Generator* - 1"1/2 Gas F
10	Probe - 1/2" Gas F
11-13	Inlet for water from heat pump / from Generator* - 1"1/2 Gas F
12	Probe - 1/2" Gas F
15	DHW outlet - 1" Gas M
16	DHW inlet - 1" Gas M
18	Lower fixed coil outlet - 1" Gas F
19	Lower fixed coil outlet - 1" Gas F
20	Upper fixed coil outlet - 1" Gas F
21	Upper fixed coil inlet - 1" Gas F

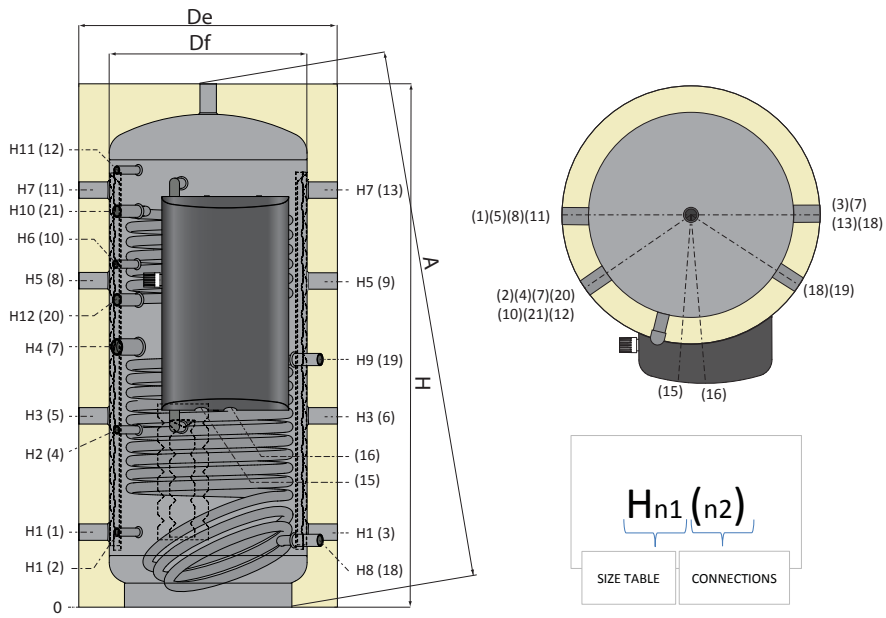

* in the presence of a second high temperature generator that works directly on the upper part of the storage tank

It is recommended not to use the connection on the top of tank for the delivery from a heat pump or a high temperature generator to avoid any stratification spoiling.

It is recommended to use this thermal storage tank for the production of sanitary hot water only and not as auxiliary heating source on system side. In this case, the use of a dedicated tank is recommended.

SIZE TABLE

Capacity	Df	De	H	A	H1	H2	H3	H4	H5	H6	H7	H8	H9	H10	H11	H12
[litres]	[mm]															
300	550	750	1360	1374	232	425	497	645	762	870	1048	195	604	1002	1085	762
500	650	850	1719	1737	247	583	629	904	1011	1124	1393	220	814	1301	1393	1011
800	790	990	1888	1915	265	613	690	898	1115	1138	1541	265	749	1428	1138	1020

This series of thermal storage tanks, fruit of a partnership combining the experience of Galletti and Cordivari, was specifically conceived for pairing with heat pumps.

Check in table 1 the coupling of heating element and DHW production tank

	RYR02M	RYR03M	RYR06T	RYR12T
RYTN300	✔	✔	-	-
RYTN600	✔	✔	✔	-
RYTN800	✔	✔	✔	✔
RYTNSH300	✔	✔	-	-
RYTNSH600	✔	✔	✔	-
RYTNSH800	✔	✔	✔	✔
RYTP300	✔	✔	-	-
RYTP500	✔	✔	✔	-
RYTP800	✔	✔	✔	✔
RYTPSH300	✔	✔	-	-
RYTPSH500	✔	✔	✔	-
RYTPSH800	✔	✔	✔	✔

Table 1 - Tank - heating elements combinations

NOTES

TOTAL HEAT RECOVERY MULTI-PURPOSE REVERSIBLE AIR/ WATER HEAT PUMPS

> HEATING
> AIR CONDITIONING
> COOLING
> COOLING
> DEHUMIDIFICATION
> DOMESTIC HOT WATER
> 2 AND 4 PIPES SYSTEMS
> MAXIMUM ENERGY EFFICIENCY
> TOTAL HEAT RECOVERY
> INTEGRATED HYDRONIC SYSTEM
> SMART DEFROST SYSTEM

LCP multifunctional units are air conditioning and domestic hot water (DHW) production units conceived for both residential and industrial use and designed to operate 24 hours a day.

They cover a wide range of heating capacities, from 50 to 370 kW, guaranteeing a high thermodynamic efficiency and broad configurability, both in terms of accessories and cooling circuits.

All units of the LCP series, regardless of size, can be made in a standard configuration "S" or a low-noise configuration "L", in which the compressors and compressor compartment are covered with sound-deadening material and the unit is specially dimensioned so as to be compatible with a reduced fan speed.

All units of the LCP series, regardless of size, can be coupled with both 2- and 4-pipe systems; the letter "P" indicates heat pump with total recovery for 4-pipe systems and the letter "M" indicates multifunctional heat pump for 2-pipe systems.
The LCP units are identified by the following code:

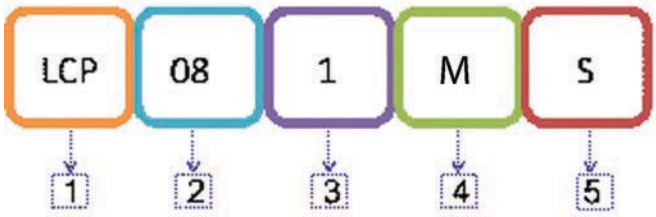

1 Initials identifying the Galletti model (example: "LCP" unit)
2 Unit size expressed in rated cooling capacity x10 [kW] (example: 08 ≥ 80 kW)
3 Efficiency Pack: layout of cooling circuit and compressors (example: Efficiency Pack 1)
4 Unit version (example: "H", Multifunctional)
5 Unit configuration (example: "S", optional sound insulation not present)

LCP multifunctional units have 4 water connections for two different plumbing circuits for 2- or 4-pipe systems:
Circuit 1, production of chilled water (or hot water if the unit is reversible like LCP M)
Circuit 2, production of hot water through total heat recovery

Schematic illustration of the operating modes available for an **LCP M** which interfaces with a 2-pipe air conditioning system and guarantees the production of hot or cold water on the primary side and the simultaneous production of hot water on the total recovery side.

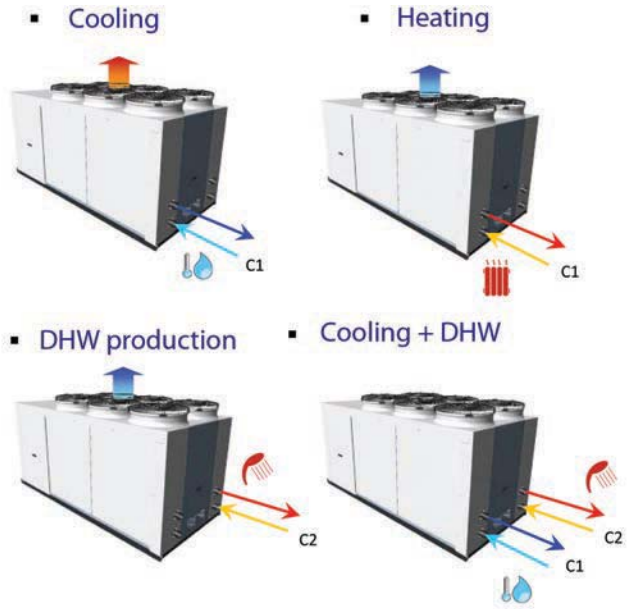

Schematic illustration of the operating modes available for an **LCP P** unit which interfaces with a 4-pipe heating/air conditioning system and guarantees the simultaneous production of hot and cold water

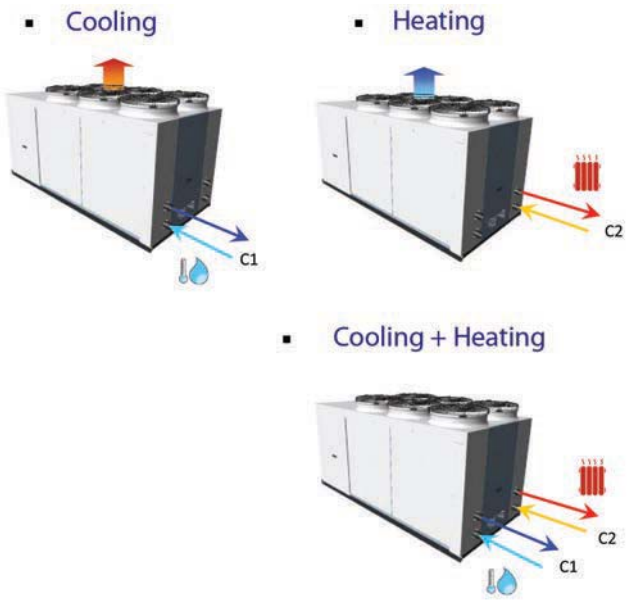

OPERATING MODES OF LCP M TOTAL HEAT RECOVERY MULTI-PURPOSE UNITS

Cooling
In the "Chiller" mode the LCP M multifunctional unit chills water to cool a room on the user side, dissipating the condensation heat in air by means of a finned block condenser.

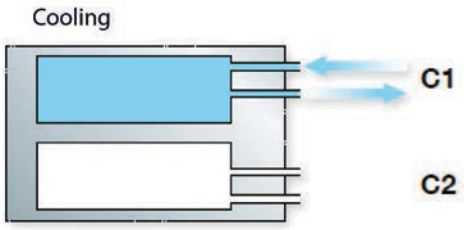

Heating
In the "Heat Pump" mode the LCP M unit heats the water in the condenser to provide heating on the user side, absorbing the evaporative cooling capacity in air by means of a finned block heat exchanger.
In other words, a certain amount of heat is drawn from the thermal source, air, which is delivered to the user after reaching a thermal level such as to satisfy needs.

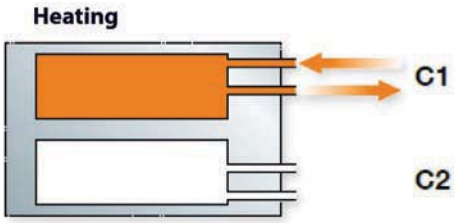

Hot water production (for sanitary use-DHW)
In the "Production of High-temperature Hot Water for sanitary use (DHW)" mode the LCP M multifunctional unit heats water in the second condenser, absorbing the evaporative cooling capacity in air by means of a finned block heat exchanger.

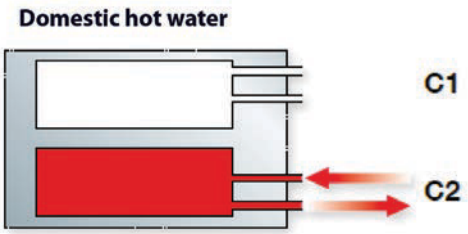

Cooling and hot water production through total recovery
In the "Chiller + DHW" mode the LCP M multifunctional unit can produce chilled water with the simultaneous production of high-temperature hot water for sanitary use, thanks to total heat recovery.

Production of hot water (for example for sanitary use) simultaneously with heating
In the "Simultaneous DHW Production and Heating" mode the LCP M multifunctional unit heats water in parallel, optimally exploiting the complete independence of its thermodynamic circuits. Capacity is equally divided between the two circuits.

LCP units enable the installation of a simple air conditioning system, either 2-pipe or 4-pipe.

The designation "two-pipe" or "four-pipe" refers to the system for distributing the water used by all the air conditioning equipment of a building.

A two-pipe system has a single supply line and a single line for the return of water to the unit. The indoor units served by a two-pipe system contain only an exchanger, which works alternatively as a heating or cooling coil, according to the operating mode.

The four-pipe system has a distribution system that simultaneously offers both hot water (with respective return lines) and chilled water (with respective return lines) (for example, cooling systems with dehumidification + post-heating).

Schematic illustration of a 2-pipe air conditioning system:

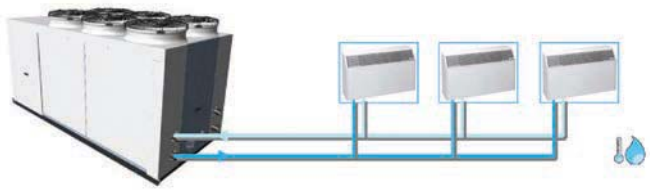

Schematic illustration of a 4-pipe air conditioning system:

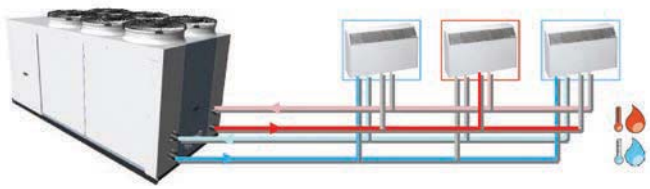

Two-pipe systems are less flexible than a four-pipe system, since the entire building is alternatively in the heating or cooling mode; however, they enable large savings to be achieved when it comes to installing the system.
If design requirements call for a 4-pipe system, LCP P units, compatible with this configuration, are available on request.

POSSIBLE COMBINATIONS OF OPERATING MODES WITH VARIATIONS IN THERMAL LOAD

The possible operating modes of LCP units under partial load conditions are listed in the tables below.
The units are equipped with two thermodynamic circuits and two or four compressors, which combine their operation to satisfy the variable requirements of the air conditioning system.
For example, in the winter mode, LCP units are capable of dividing their power evenly, 50% to domestic hot water and 50% to heating.

Unit with 2 Compressors 2 Cooling circuits:

Summer Mode:	Winter Mode:
• **100% Cold** • 50% Cold	• **100% Hot** • 50% Hot
• **100% Cold + 100% DHW** • 50% Cold + 50% DHW	
• 50% Cold + 100% DHW • 100% Cold + 50% DHW	• 50% Hot + 50% DHW
• 100% DHW • 50% DHW	• **100% DHW** • 50% DHW

Unit with 4 Compressors 2 Cooling circuits:

Summer Mode:	Winter Mode:
• **100% Cold** • 75% Cold • 50% Cold • 25% Cold	• **100% Hot** • 75% Hot • 50% Hot • 25% Hot
• **100% Cold + 100% DHW** • 75% Cold + 75% DHW • 50% Cold + 50% DHW • 25% Cold + 25% DHW	
• 50% Cold + 100% DHW • 25% Cold + 100% DHW • 100% Cold + 50% DHW • 100% Cold + 25% DHW	• 50% Hot + 50% DHW • 50% Hot + 25% DHW • 25% Hot + 50% DHW • 25% Hot + 25% DHW
• 100% DHW • 75% DHW • 50% DHW • 25% DHW	• **100% DHW** • 75% DHW • 50% DHW • 25% DHW

SOLUTION TO THE PROBLEM OF DEFROSTING

LCP units provide excellent thermodynamic efficiency and utmost flexibility of use, thanks to constant product research: they can drive a 2- or 4-pipe system, produce DHW simultaneously with chilled water and cover a wide range of capacities.
The combined application of scroll compressors, advanced control systems and the refrigerant gas R410A results in compact circuits and high COPs.

Thanks to the presence of two thermodynamic circuits which are completely independent of each other, the LCP M presents itself on the market as a unique offering, capable of producing hot water for heating while simultaneously carrying out a defrost cycle or guaranteeing the replenishment of domestic hot water.
During the wintertime period, especially with temperatures ranging between 3°C and +3°C, the high ambient relative humidity causes the formation of water condensation around the exchanger fins.
Since the exchanger is at a lower temperature than the outdoor air, the water in contact with it ends up hindering the heat exchange necessary for the system to work correctly.
A defrost cycle is a temporary reversal of the thermodynamic cycle which switches the unit into the summer mode and melts the ice present between fins.
This phase is obviously problematic, since the cooling cycle warms up the exchanger by drawing heat from the room that was previously being heated.
The circuit that is defrosting will draw heat on the user side (that is, not on the DHW side) if the unit is LCP M, and will heat on the hot water user side if the unit is LCP P.

The LCP unit reduces this problem with the following technical innovations:

Hydrophilic coils are installed; these break down the drops of water into particles and reduce the obstruction of the space between one fin and another caused by ice build-up.
Thanks to a lower surface tension, the water tends to slide and precipitate by gravity, preventing the formation of frost at low temperatures.

The software which manages the defrost cycle minimizes the time it takes to complete it and only acts when it is really necessary. The fans are pushed to their maximum capacity at just the right time, that is, when the ice is no longer stuck to the fins, and mechanically ejects it from the heat exchanger.

The two thermodynamic circuits in the LCP M and LCP P are completely independent and while one defrosts, the other circuit is able to ensure continuity in the unit's operation, with practically no thermal discomfort for the user.

LCP S technical data		41	51	61	71	81	94	104	124
Cooling @ 35°C air 12/7°C water									
Cooling capacity	[kW]	51,6	56,3	67,5	74,1	83	102,4	111,7	134,8
Compressor input power	[kW]	14,8	16,8	18,7	21,2	24,9	30	34,1	37,1
EER (according to UNI-14511)	[-]	3,22	3,12	3,28	3,21	3,1	3,15	3,04	3,09
USER Water flow	[kg/h]	8866	9675	11592	12725	14256	17588	19174	23149
USER water pressure drops	[kPa]	29	34	34	41	33	37	43	45
Available head - LP Pumps	[kPa]	155	147	138	126	126	124	114	102
DHW @ 50/55°C and 7°C outdoor air									
Heating capacity	[kW]	54,3	59,7	70,6	77,3	87	107,4	118,4	141,1
Compressor input power	[kW]	18,2	20,5	23,4	26,8	30,2	36,3	40,9	47
COP (according to UNI-14511)	[-]	2,79	2,74	2,79	2,69	2,71	2,76	2,72	2,63
DHW water flow	[kg/h]	9463	10411	12307	13486	15169	18730	20647	24609
DHW pressure drops	[kPa]	32	39	39	47	37	43	51	51
Available head - LP Pumps	[kPa]	147	137	128	115	115	114	101	90
Cooling + DHW @ 50/55°C and 12/7°C									
Cooling capacity	[kW]	44,1	48,3	57,2	62,7	72,3	88,3	96,8	113,3
Heating capacity	[kW]	61,5	67,9	79,6	88,1	100,8	123,1	136	158,2
Compressor input power	[kW]	18,3	20,7	23,6	26,8	30,1	36,6	41,3	47,3
COP (according to UNI-14511)	[-]	3,33	3,25	3,34	3,25	3,32	3,32	3,25	3,3
USER Water flow	[kg/h]	7576	8288	9821	10764	12413	15160	16615	19450
USER water pressure drops	[kPa]	22	25	25	30	25	28	34	33
Available head - LP Pumps USER	[kPa]	167	161	155	145	142	137	129	123
DHW water flow	[kg/h]	10731	11842	13881	15371	17589	21466	23724	27589
DHW pressure drops	[kPa]	41	49	48	59	48	54	65	63
Available head - LP Pumps DHW	[kPa]	133	120	110	91	88	94	78	69
Heating @ 40/45°C and 7°C outdoor air									
Heating capacity	[kW]	56,2	62,2	72,9	80,3	89,8	111	122,5	147
Compressor input power	[kW]	14,8	16,6	19	21,5	24,4	29,5	33,2	38,3
COP (according to UNI-14511)	[-]	3,49	3,47	3,48	3,43	3,41	3,46	3,42	3,27
USER Water flow	[kg/h]	9761	10805	12660	13950	15613	19295	21291	25543
USER water pressure drops	[kPa]	34	41	41	49	39	45	54	55
Available head - LP Pumps	[kPa]	145	134	125	110	111	111	98	85
Max. Current (FLA) [Without Options]	A	41	44	51	55	66	81	87	96
Inrush Current (LRA) [Without Options]	A	159	162	185	183	191	194	198	220
Inrush Current with Soft Starter kit [Without Options]	A	104	105	121	119	124	126	129	143
Sound power level Lw (basic unit)	db(A)	80	80	81	81	81	82	82	82
Sound pressure Lp (basic unit) @10 m Q=2	db(A)	52	52	53	53	53	54	54	54
Air flow rate	m3/h	21379	21379	30913	30913	30913	41340	41340	72700
Number of fans		4	4	6	6	6	8	8	6
Compressors/Circuits		2/2	2/2	2/2	2/2	2/2	4/2	4/2	4/2
Tank Capacity (optional)	l	200	200	220	220	220	340	340	600
Refrigerant - Power supply [V/n/Hz]		R410A - 400 / 3+N / 50							
ESEER		4,5	4,57	4,53	4,58	4,63	4,47	4,55	3,98
Dimensions [HxLxD]	mm	1720x2010x1185	1720x2010x1185	1720x2360x1185	1720x2360x1185	1720x2360x1185	1720x3540x1185	1720x3540x1185	1830x3540x1654
Weight without accessories	kg	440	440	525	530	595	860	860	1035

LCP S technical data		144	164	194	214	244	274	294	324
Cooling @ 35°C air 12/7°C water									
Cooling capacity	[kW]	148	166,5	193,4	222,7	247,6	281,1	309,2	327,1
Compressor input power	[kW]	42,1	48,6	59,9	68,3	81,2	90,3	97	106,7
EER (according to UNI-14511)	[-]	3,03	3,01	2,9	2,96	2,81	2,83	2,91	2,82
USER Water flow	[kg/h]	25421	28597	33204	38249	42526	48275	53097	56165
USER water pressure drops	[kPa]	54	49	46	60	62	43	51	68
Available head - LP Pumps	[kPa]	145	140	138	134	165	170	151	127
DHW @ 50/55°C and 7°C outdoor air									
Heating capacity	[kW]	156,3	174,5	204,1	240	270,4	306,4	331,4	355,7
Compressor input power	[kW]	53,8	61	71,8	83,5	94,5	105,7	113,4	122,6
COP (according to UNI-14511)	[-]	2,58	2,58	2,6	2,65	2,66	2,66	2,7	2,69
DHW water flow	[kg/h]	27257	30445	35604	41864	47161	53451	57807	62052
DHW pressure drops	[kPa]	63	56	53	72	75	64	73	83
Available head - LP Pumps	[kPa]	129	125	117	102	140	135	114	93
Cooling + DHW @ 50/55°C and 12/7°C									
Cooling capacity	[kW]	124,2	142	169,9	193,5	220,7	248	272,7	290,5
Heating capacity	[kW]	175,3	199,5	238	272,8	310,6	348,3	380,9	407,6
Compressor input power	[kW]	53,8	60,6	71,6	83,5	94,6	105,6	113,9	123,3
COP (according to UNI-14511)	[-]	3,21	3,25	3,27	3,21	3,22	3,24	3,28	3,23
USER Water flow	[kg/h]	21324	24388	29184	33233	37908	42590	46830	49884
USER water pressure drops	[kPa]	40	37	37	47	50	35	41	55
Available head - LP Pumps USER	[kPa]	170	165	165	170	186	191	176	155
DHW water flow	[kg/h]	30574	34806	41515	47585	54177	60757	66446	71103
DHW pressure drops	[kPa]	77	71	70	91	96	81	94	106
Available head - LP Pumps DHW	[kPa]	102	93	66	50	100	96	66	40
Heating @ 40/45°C and 7°C outdoor air									
Heating capacity	[kW]	162,9	181	211,5	249	280,5	318,7	343,5	371,7
Compressor input power	[kW]	43,1	49,1	57,4	66,8	76,4	85,7	92,4	99,8
COP (according to UNI-14511)	[-]	3,26	3,24	3,29	3,37	3,35	3,35	3,36	3,39
USER Water flow	[kg/h]	28309	31450	36756	43271	48745	55379	59699	64597
USER water pressure drops	[kPa]	67	59	56	77	79	69	78	89
Available head - LP Pumps	[kPa]	122	119	109	91	133	126	106	81
Max. Current (FLA) [Without Options]	A	105	126	148	167	190	215	229	242
Inrush Current (LRA) [Without Options]	A	222	241	307	318	382	398	464	472
Inrush Current with Soft Starter kit [Without Options]	A	145	157	200	207	248	259	301	307
Sound power level Lw (basic unit)	db(A)	82	83	83	83	83	84	84	84
Sound pressure Lp (basic unit) @10 m Q=2	db(A)	54	55	55	55	55	56	56	56
Air flow rate	m3/h	72700	67672	67672	75478	75478	103511	97902	97902
Number of fans		6	6	6	6	6	8	8	8
Compressors/Circuits		4/2	4/2	4/2	4/2	4/2	4/2	4/2	4/2
Tank Capacity (optional)	l	600	600	600	600	600	765	765	765
Refrigerant - Power supply [V/n/Hz]		R410A - 400 / 3+N / 50							
ESEER		4,07	4,21	4,32	4,44	4,24	4,19	4,33	4,29
Dimensions [HxLxD]	mm	1830x3540x1654	1830x3540x1654	1830x3540x1654	2174x3540x1654	2174x3540x1654	2174x4296x1654	2174x4296x1654	2174x4296x1654
Weight without accessories	kg	1050	1200	1215	1180	1290	2308	2347	2369

LCP L technical data		41	51	61	71	81	94	104	124
Cooling @ 35°C air 12/7°C water									
Cooling capacity	[kW]	49,7	53,7	65,1	70,9	78,7	98,1	106	127,6
Compressor input power	[kW]	15,7	18	19,8	22,8	26,9	31,9	36,8	40,3
EER (according to UNI-14511)	[-]	3,06	2,89	3,14	2,99	2,83	2,96	2,78	2,86
USER Water flow	[kg/h]	8533	9225	11173	12171	13512	16849	18209	21906
USER water pressure drops	[kPa]	27	31	32	38	30	34	40	41
Available head - LP Pumps	[kPa]	158	152	142	132	133	128	120	109
DHW @ 50/55°C and 7°C outdoor air									
Heating capacity	[kW]	53,7	59,1	69,3	76,8	85,8	106,5	116,8	135,9
Compressor input power	[kW]	18,2	20,5	23,3	26,8	30,3	36,3	40,9	46,8
COP (according to UNI-14511)	[-]	2,86	2,8	2,86	2,76	2,75	2,83	2,77	2,66
DHW water flow	[kg/h]	9372	10309	12084	13400	14973	18573	20381	23713
DHW pressure drops	[kPa]	32	38	38	46	36	42	50	48
Available head - LP Pumps	[kPa]	148	138	130	116	117	115	103	96
Cooling + DHW @ 50/55°C and 12/7°C									
Cooling capacity	[kW]	44,1	48,3	57,2	62,7	72,3	88,3	96,8	113,3
Heating capacity	[kW]	61,5	67,9	79,6	88,1	100,8	123,1	136	158,2
Compressor input power	[kW]	18,3	20,7	23,6	26,8	30,1	36,6	41,3	47,3
COP (according to UNI-14511)	[-]	3,33	3,25	3,34	3,25	3,32	3,32	3,25	3,3
USER Water flow	[kg/h]	7576	8288	9821	10764	12413	15160	16615	19450
USER water pressure drops	[kPa]	22	25	25	30	25	28	34	33
Available head - LP Pumps USER	[kPa]	167	161	155	145	142	137	129	123
DHW water flow	[kg/h]	10731	11842	13881	15371	17589	21466	23724	27589
DHW pressure drops	[kPa]	41	49	48	59	48	54	65	63
Available head - LP Pumps DHW	[kPa]	133	120	110	91	88	94	78	69
Heating @ 40/45°C and 7°C outdoor air									
Heating capacity	[kW]	55,8	61,3	71,8	79,7	88,6	110	121,4	141,2
Compressor input power	[kW]	14,8	16,6	19	21,5	24,3	29,5	33,2	38,1
COP (according to UNI-14511)	[-]	3,62	3,55	3,6	3,55	3,51	3,57	3,51	3,33
Air flow rate DISSIPATION	[m3/h]	15398	15398	21955	21955	21955	29393	29393	43434
USER Water flow	[kg/h]	9700	10650	12484	13852	15404	19115	21089	24532
USER water pressure drops	[kPa]	34	40	40	49	38	44	53	51
Available head - LP Pumps	[kPa]	145	135	127	111	113	112	99	91
Max. Current (FLA) [Without Options]	A	41	44	51	55	66	81	87	96
Inrush Current (LRA) [Without Options]	A	159	162	185	183	191	194	198	220
Inrush Current with Soft Starter kit [Without Options]	A	104	105	121	119	124	126	129	143
Sound power level Lw (basic unit)	db(A)	70	70	72	72	72	74	74	76
Sound pressure Lp (basic unit) @10 m Q=2	db(A)	42	42	44	44	44	46	46	48
Air flow rate	m3/h	15398	15398	21955	21955	21955	29393	29393	43434
Number of fans		4	4	6	6	6	8	8	6
Compressors/Circuits		2/2	2/2	2/2	2/2	2/2	4/2	4/2	4/2
Tank Capacity (optional)	l	200	200	220	220	220	340	340	600
Refrigerant - Power supply [V/n/Hz]		R410A - 400 / 3+N / 50							
ESEER		4,67	4,68	4,79	4,76	4,72	4,63	4,63	4,16
Dimensions [HxLxD]	mm	1720x2010x1185	1720x2010x1185	1720x2360x1185	1720x2360x1185	1720x2360x1185	1720x3540x1185	1720x3540x1185	1830x3540x1654
Weight without accessories	kg	440	440	525	530	595	860	860	1035

LCP L technical data		144	164	194	214	244	274	294	324
Cooling @ 35°C air 12/7°C water									
Cooling capacity	[kW]	138,1	154,2	187,6	217,1	241	274,8	300,5	316,7
Compressor input power	[kW]	46,6	54,5	62,6	71,1	84,6	93,2	101,1	111,3
EER (according to UNI-14511)	[-]	2,71	2,62	2,8	2,87	2,7	2,75	2,79	2,68
USER Water flow	[kg/h]	23718	26480	32223	37283	41383	47185	51601	54392
USER water pressure drops	[kPa]	48	43	44	58	59	42	48	64
Available head - LP Pumps	[kPa]	156	153	145	141	171	174	157	135
DHW @ 50/55°C and 7°C outdoor air									
Heating capacity	[kW]	150,7	171,6	203,3	239	268,4	305,1	330	354,2
Compressor input power	[kW]	53,7	61,1	71,8	83,5	94,1	105,8	113,4	122,6
COP (according to UNI-14511)	[-]	2,59	2,62	2,66	2,71	2,71	2,71	2,73	2,72
DHW water flow	[kg/h]	26284	29931	35453	41686	46817	53227	57555	61792
DHW pressure drops	[kPa]	59	54	53	72	74	64	73	82
Available head - LP Pumps	[kPa]	135	128	118	104	142	136	116	95
Cooling + DHW @ 50/55°C and 12/7°C									
Cooling capacity	[kW]	124,2	142	169,9	193,5	220,7	248	272,7	290,5
Heating capacity	[kW]	175,3	199,5	238	272,8	310,6	348,3	380,9	407,6
Compressor input power	[kW]	53,8	60,6	71,6	83,5	94,6	105,6	113,9	123,3
COP (according to UNI-14511)	[-]	3,21	3,25	3,27	3,21	3,22	3,24	3,28	3,23
USER Water flow	[kg/h]	21324	24388	29184	33233	37908	42590	46830	49884
USER water pressure drops	[kPa]	40	37	37	47	50	35	41	55
Available head - LP Pumps USER	[kPa]	170	165	165	170	186	191	176	155
DHW water flow	[kg/h]	30574	34806	41515	47585	54177	60757	66446	71103
DHW pressure drops	[kPa]	77	71	70	91	96	81	94	106
Available head - LP Pumps DHW	[kPa]	102	93	66	50	100	96	66	40
Heating @ 40/45°C and 7°C outdoor air									
Heating capacity	[kW]	155	177,6	209,5	246,7	279,2	317,2	341,9	368,3
Compressor input power	[kW]	42,9	49,2	57,4	66,8	76,4	85,7	92,4	99,8
COP (according to UNI-14511)	[-]	3,27	3,31	3,38	3,44	3,43	3,42	3,43	3,43
USER Water flow	[kg/h]	26935	30862	36413	42872	48519	55122	59409	64004
USER water pressure drops	[kPa]	62	57	55	75	79	68	77	88
Available head - LP Pumps	[kPa]	132	123	112	95	134	128	107	84
Max. Current (FLA) [Without Options]	A	105	126	148	167	190	215	229	242
Inrush Current (LRA) [Without Options]	A	222	241	307	318	382	398	464	472
Inrush Current with Soft Starter kit [Without Options]	A	145	157	200	207	248	259	301	307
Sound power level Lw (basic unit)	db(A)	76	77	77	78	78	79	79	79
Sound pressure Lp (basic unit) @10 m Q=2	db(A)	48	49	49	50	50	51	51	51
Air flow rate	m3/h	43434	40235	55808	63261	63261	87186	81687	81687
Number of fans		6	6	6	6	6	8	8	8
Compressors/Circuits		4/2	4/2	4/2	4/2	4/2	4/2	4/2	4/2
Tank Capacity (optional)	l	600	600	600	600	600	765	765	765
Refrigerant - Power supply [V/n/Hz]		R410A - 400 / 3+N / 50							
ESEER		4,19	4,22	4,47	4,63	4,34	4,32	4,4	4,35
Dimensions [HxLxD]	mm	1830x3540x1654	1830x3540x1654	1830x3540x1654	2174x3540x1654	2174x3540x1654	2174x4296x1654	2174x4296x1654	2174x4296x1654
Weight without accessories	kg	1050	1200	1215	1180	1290	2308	2347	2369

OVERALL DIMENSIONS LCP FRAME 1 (LCP 041-051)

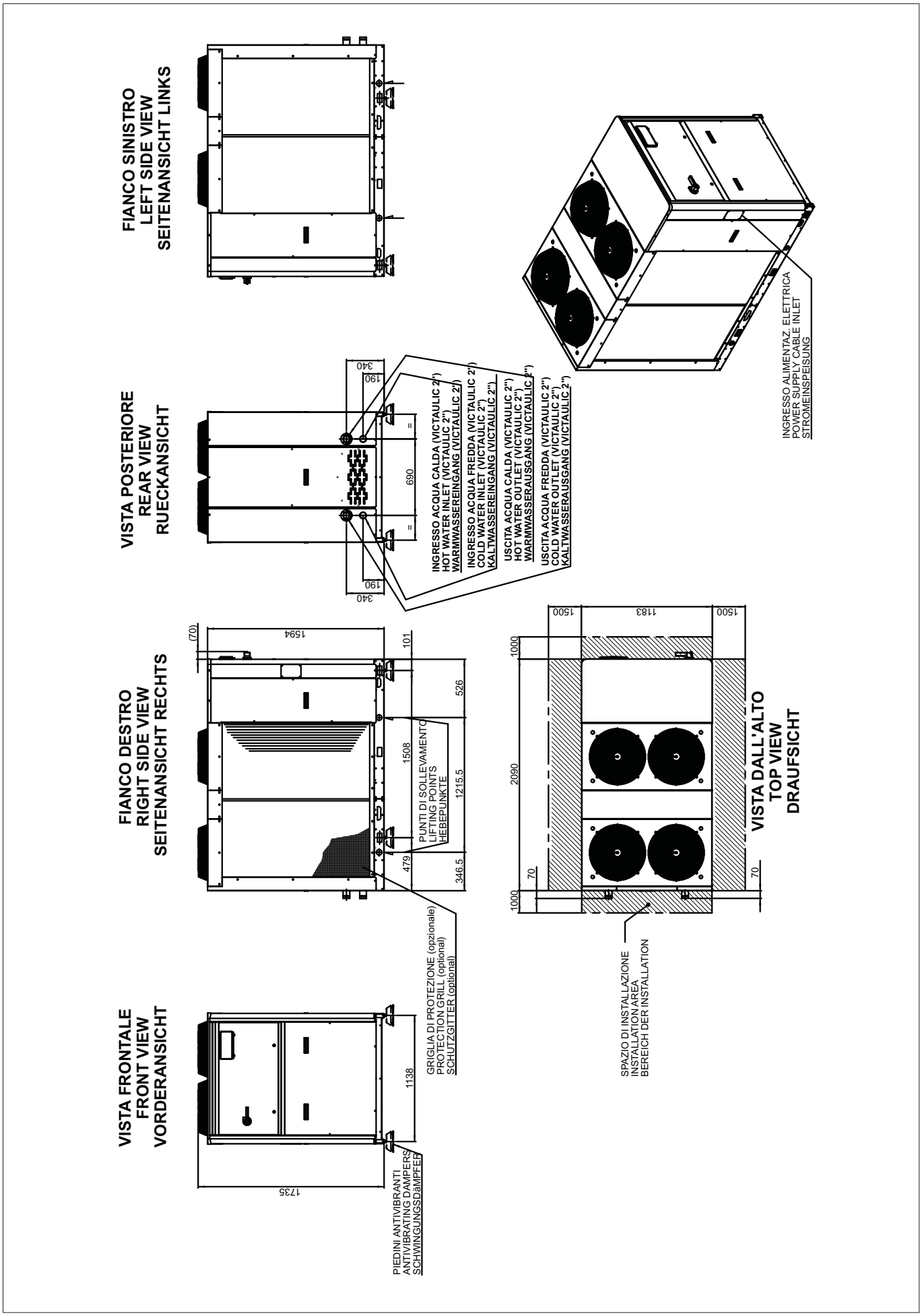

OVERALL DIMENSIONS LCP FRAME 2 (LCP 061-071-081)

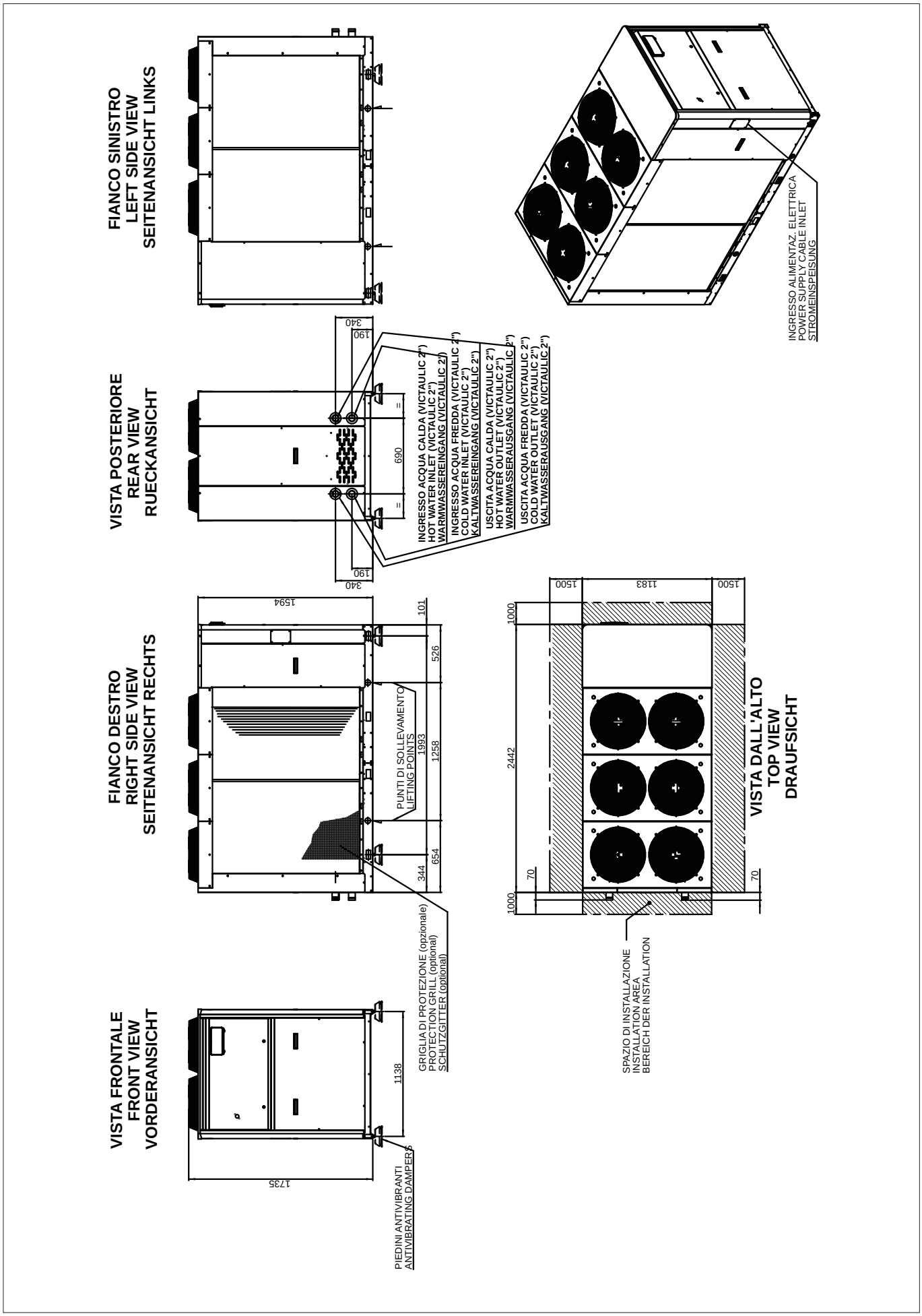

OVERALL DIMENSIONS LCP FRAME 3+ (LCP 094-104)

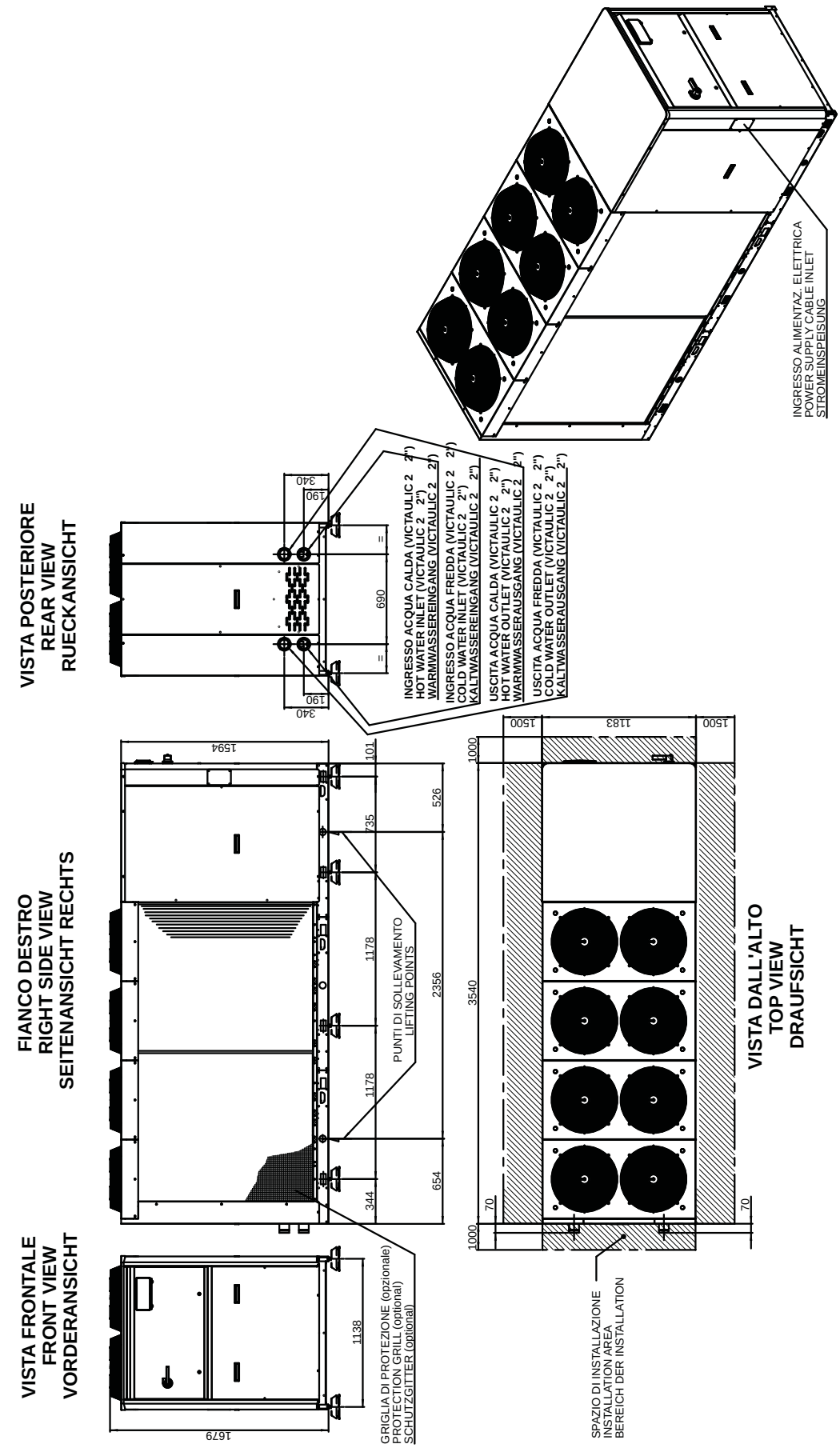

OVERALL DIMENSIONS LCP FRAME 4 (LCP 124-144-164-194)

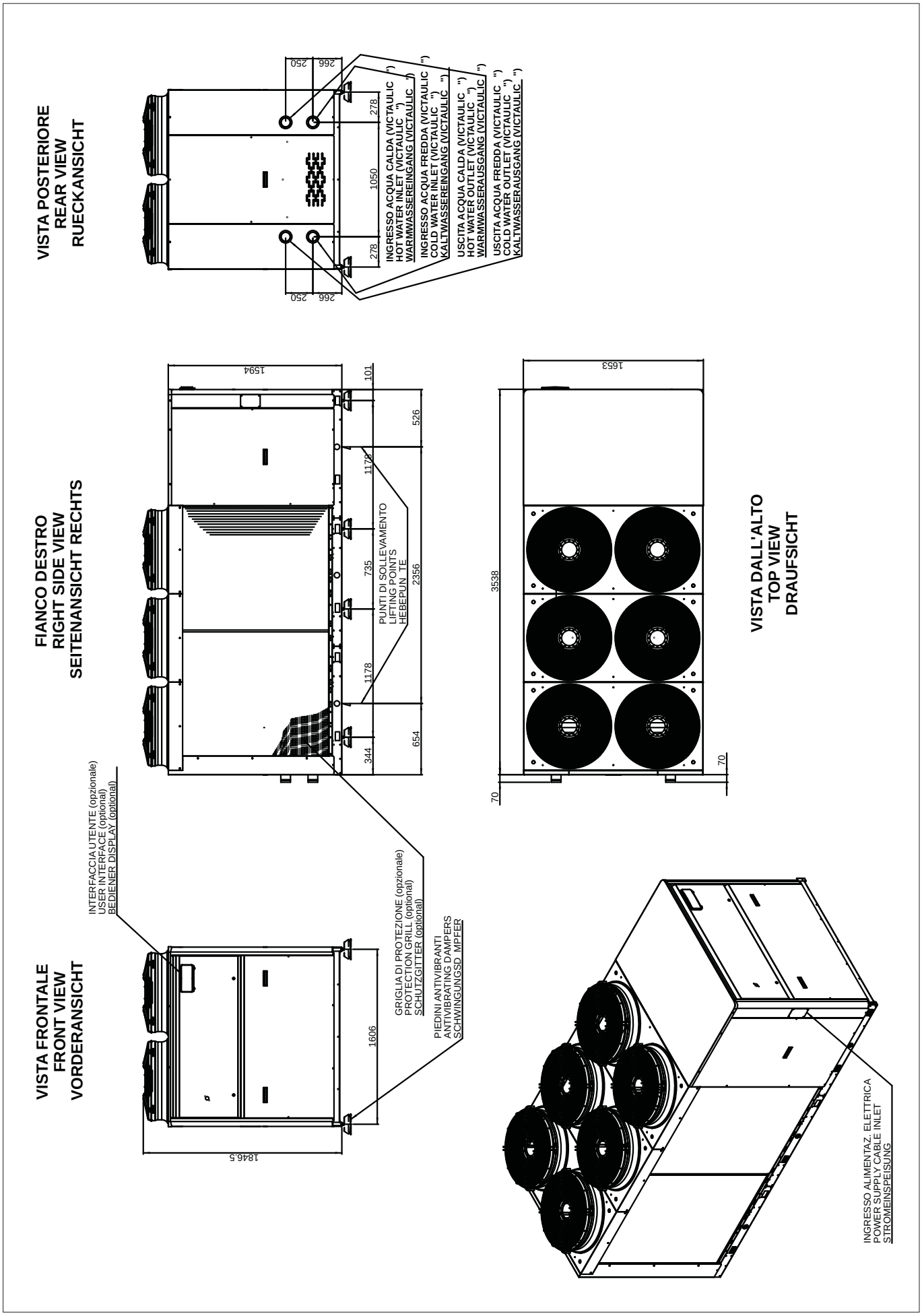

OVERALL DIMENSIONS LCP FRAME 5 (LCP 214-244)

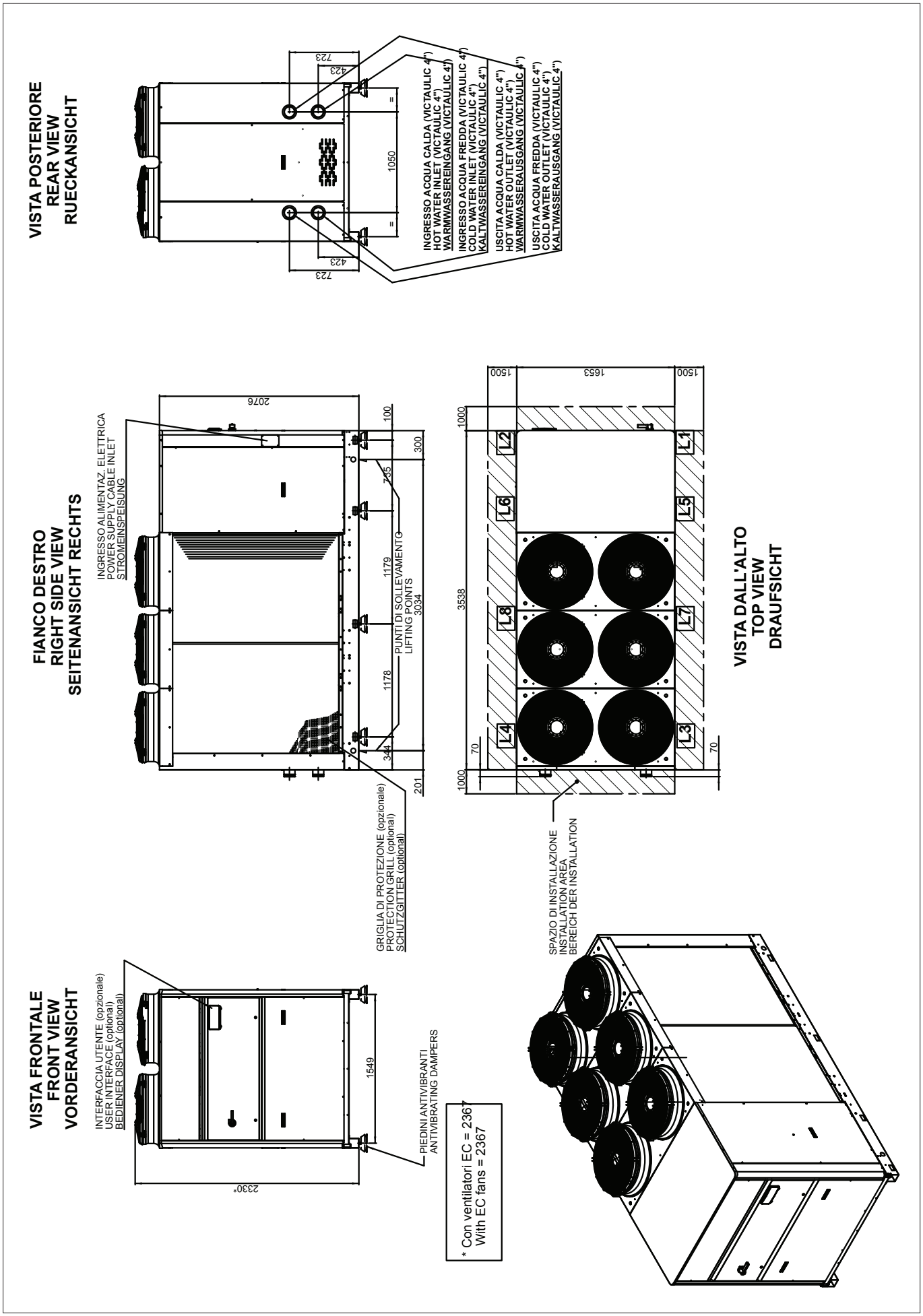

OVERALL DIMENSIONS LCP FRAME 6 (LCP 274-294-324)

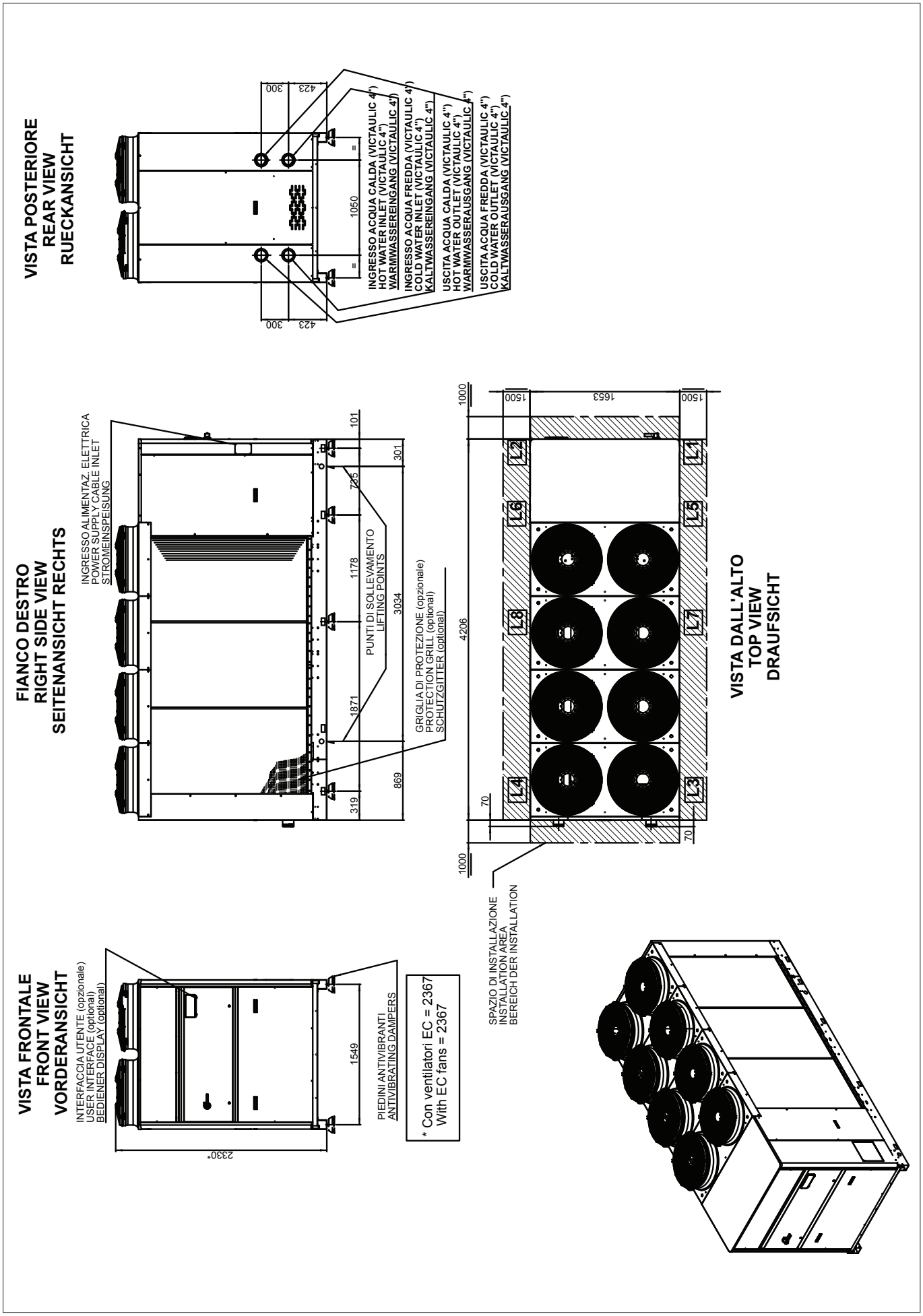

NOTES

TOTAL HEAT RECOVERY MULTI-PURPOSE REVERSIBLE WATER/ WATER HEAT PUMPS

> GEOTHERMAL SYSTEM
> HEATING
> AIR CONDITIONING
> COOLING
> DEHUMIDIFICATION
> DOMESTIC HOT WATER
> MAXIMUM ENERGY EFFICIENCY
> TOTAL HEAT RECOVERY
> EXTREMELY QUIET OPERATION

LEP units have been designed for medium-high capacity applications (e.g. multi-residential or commercial units) and cover a range of heating capacities, from 40 to 420 kW, guaranteeing a high thermodynamic efficiency and broad configurability, both in terms of accessories and cooling circuits.

LEP chillers have been designed as fully enclosed units to ensure exceptionally quiet operation, so that they need not be installed in a closed-off area, and they feature an innovative rounded shape which softens their aesthetic impact.

LEP multifunctional units have 6 water connections for three different plumbing circuits for 2-pipe systems:
- Circuit 1, production of chilled or hot water
- Circuit 2, production of hot or cold water for dissipation in opposition to user side
- Circuit 3, hot water production for sanitary use (DHW)

For this reason, multifunction units contain 3 distinct heat exchangers:
- "1" plate heat exchanger with evaporating and condensing function designed for user circuit
- "2" plate heat exchanger with evaporating and condensing function designed for dissipation circuit
- "3" plate heat exchanger designed for the DHW circuit with condensing function

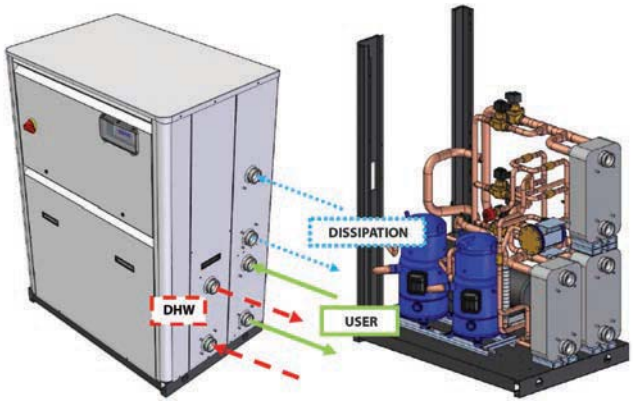

OPERATING MODES OF LEP TOTAL HEAT RECOVERY MULTI-PURPOSE UNITS

In the "Chiller" mode the unit cools water to air condition the interior on the user side, dissipating the condensation heat by means of water that is cooled in the dissipation exchanger.

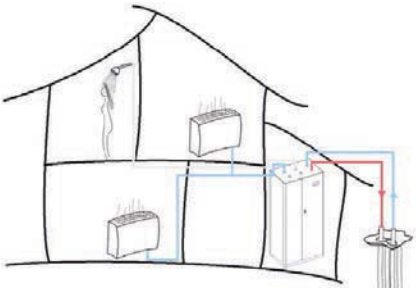

In the "Heat pump" mode the unit heats water in the condenser to provide indoor heating on the user side, dissipating the evaporation cooling capacity by means of water that is heated in the dissipation exchanger.
In other words, a certain amount of heat is drawn from the thermal source, which is delivered to the user after reaching a thermal level such as to satisfy needs.

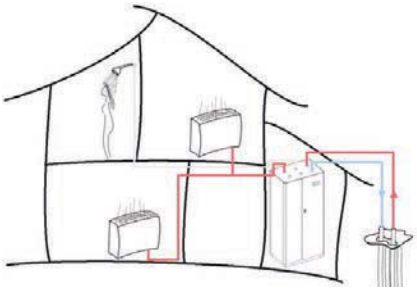

In the "production of high-temperature sanitary hot water (DHW)" mode the unit heats water in the condenser, dedicated to DHW if necessary, dissipating the evaporative cooling capacity by means of water that is heated in the exchanger on the dissipation side.

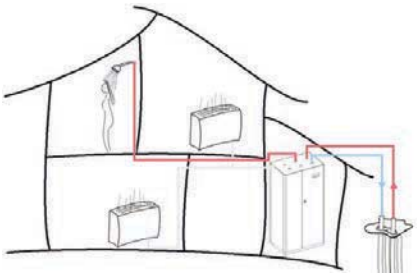

In the "Chiller + DHW" mode the unit can produce chilled water with the simultaneous production of high-temperature hot water for sanitary use, thanks to total heat recovery.

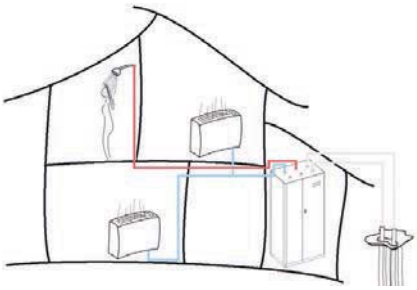

LEP units enable the installation of a simple air conditioning system, either 2-pipe or 4-pipe.
The designation "two-pipe" or "four-pipe" refers to the system for distributing the water used by all the air conditioning equipment of a building.

A two-pipe system has a single supply line and a single line for the return of water to the unit.
The indoor units served by a two-pipe system contain only an exchanger, which works alternatively as a heating and cooling coil, according to the operating mode.
The four-pipe system has a distribution system that simultaneously offers both hot water (with respective return lines) and chilled water (with respective return lines).

Schematic illustration of a 2-pipe air conditioning system:

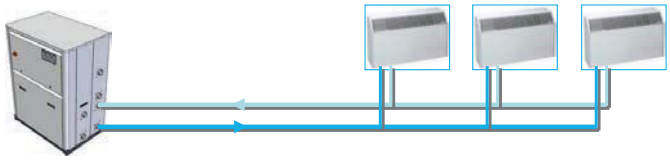

Schematic illustration of a 4-pipe air conditioning system:

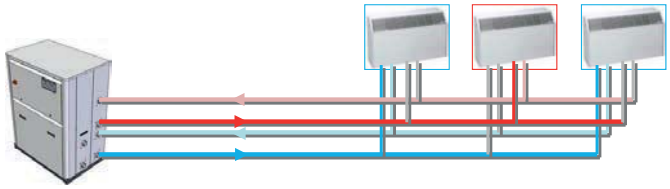

LEP technical data		42	52	62	72	82	92	112	132	142	144	162	164
Cooling mode: user 12 - 7°C, dissipation 15 - 30°C													
Cooling capacity	kW	**51,1**	**60,1**	**69,7**	**78,5**	**90,5**	**101**	**122,1**	**139,2**	**159,5**	**159,3**	**177,8**	**178,3**
Electrical input	kW	8,65	11,2	12,2	14	15,3	17,4	20,2	23,2	27	27,9	31	30,8
Absorbed current	A	13,9	7,9	19,5	22,5	24,6	27,9	32,3	3,2	43,3	44,8	49,6	49,4
EER		5,91	5,38	5,73	5,59	5,9	5,8	6,06	6	5,91	5,71	5,75	5,82
USER Water flow	l/h	8777	10328	11976	13482	15535	17340	20965	23909	27398	27363	30542	30787
USER water pressure drops	kPa	37	49	50	48	38	48	41	50	48	47	52	52
DISSIPATION Water Flow	l/h	3414	4072	4678	5285	6043	6761	8127	9280	10656	10694	11952	11998
DISSIPATION Water pressure drop	kPa	7	9	7	9	7	8	7	9	8	8	9	9
Cooling and total heat recovery (DHW): user side temperature (system) 12 -7°C, recovery side temperature (DHW) 45 - 50°C													
Cooling capacity	kW	**39,9**	**47,6**	**54,2**	**61,8**	**70,6**	**78,7**	**95,2**	**108,3**	**124,6**	**125,5**	**139,2**	**139,6**
Heating capacity	kW	**52,6**	**63,4**	**71,7**	**82,1**	**93,1**	**104,3**	**125,3**	**143,3**	**164,4**	**165,47**	**184**	**184,8**
Electrical input	kW	13,4	16,6	18,4	21,3	23,7	27	31,7	36,9	41,9	42,3	47,1	47,6
Absorbed current	A	21,5	26,6	29,6	34,2	38	43,3	50,8	59,1	67,2	67,9	75,6	76,3
TOTAL COP		6,9	6,68	6,83	6,75	6,92	6,78	6,96	6,83	6,9	6,88	6,86	6,82
USER Water flow	l/h	6749	8178	9312	10618	12124	13508	16343	18601	21400	21545	23907	23975
USER water pressure drops	kPa	23	32	32	31	24	30	26	32	30	31	34	33
DHW water flow	l/h	9163	11098	12489	14290	16206	18161	21807	24956	28621	28845	32034	32276
DHW pressure drops	kPa	38	54	40	53	40	50	41	53	49	50	54	55
Heating mode: user 40 - 45°C, dissipation 15 - 10°C													
Heating capacity	kW	**59**	**70,9**	**80,5**	**91,7**	**104,4**	**116,9**	**140,3**	**160,3**	**184,2**	**185,5**	**206,3**	**207**
Electrical input	kW	12,1	15,3	16,9	19,5	21,4	24,4	28,5	33,2	37,9	38,7	42,8	43,1
Absorbed current	A	19,5	24,5	27	31,2	34,4	39,1	45,8	53,2	60,7	62	68,7	69,2
COP		4,87	4,64	4,78	4,71	4,87	4,79	4,92	4,83	4,86	4,8	4,82	4,8
USER Water flow	l/h	10253	12322	13994	15941	18139	20315	24385	37855	32009	32243	35854	35982
USER water pressure drops	kPa	47	66	49	64	49	61	50	65	60	61	67	68
DISSIPATION Water Flow	l/h	8164	9694	11093	12594	14447	16114	19466	22145	25486	25589	28482	28558
DISSIPATION Water pressure drop	kPa	32	44	44	43	33	42	36	44	42	42	46	46
Heating mode: DHW 45 / 50°C, dissipation 15 / 10°C													
Heating capacity	kW	**57,2**	**68,8**	**77,9**	**89**	**101**	**113,3**	**136**	**155,5**	**178,4**	**179,8**	**199,6**	**200,6**
Electrical input	kW	13,4	16,8	18,6	21,4	23,7	27	31,7	36,9	41,9	42,7	47,2	47,7
Absorbed current	A	21,5	26,9	29,8	34,4	38,1	43,4	50,9	59,2	67,3	68,4	75,7	76,5
COP		4,26	4,1	4,2	4,15	4,25	4,19	4,29	4,21	4,25	4,21	4,23	4,2
USER Water flow	l/h	9954	11974	13568	15495	17586	19729	23683	27080	31061	31298	34754	34927
USER water pressure drops	kPa	45	62	47	61	47	58	48	64	57	58	63	64
DISSIPATION Water Flow	l/h	7638	9090	10370	11801	13492	15072	18212	20714	23817	23942	26613	26700
DISSIPATION Water pressure drop	kPa	29	39	39	38	29	37	32	39	37	37	41	41
Maximum absorbed current	A	30	37	40	46	50	61	70	79	91	92	102	100
Inrush current	A	111	156	157	164	176	203	238	244	289	197	2698	211
Sound power level	dB/A	72	72	73	73	74	76	76	77	77	80	77	80

LEP technical data		182	184	204	214	243	244	283	284	314	344	374	424
Cooling mode: user 12 - 7°C, dissipation 15 - 30°C													
Cooling capacity	[kW]	212,2	206,5	224	244,8	272,7	284	314	317,5	349,5	382,7	415,9	475,7
Electrical input	[kW]	35,9	34,4	37,5	40,3	45,7	45,8	53,8	53,7	61,8	66,9	71,8	78,5
Absorbed current	[A]	57,6	55,2	60,1	64,6	3,4	73,4	86,3	86,2	99,2	107,3	115,2	125,9
EER	[-]	5,91	6	5,98	6,08	5,96	6,21	5,84	5,91	5,66	5,72	5,79	6,06
USER Water flow	[kg/h]	36436	35456	38469	42044	46837	48775	53931	54517	60081	65730	71427	81686
USER water pressure drops	[kPa]	46	45	51	9	51	33	39	40	48	47	46	48
DISSIPATION Water Flow	[kg/h]	14171	13762	14938	16288	18194	13844	21010	21204	23510	25680	27860	31661
DISSIPATION Water pressure drop	[kPa]	8	8	9	9	9	5	7	7	8	8	8	8
Cooling and total heat recovery (DHW): user side temperature (system) 12 -7°C, recovery side temperature (DHW) 45 - 50°C													
Cooling capacity	[kW]	165,6	161,2	174,6	190,9	215,2	222,9	246,5	249,8	275,5	303,3	326,4	370,2
Heating capacity	[kW]	217,6	211	230,2	251	281,5	391,9	324,7	329,2	365,2	397,5	430,9	492,8
Electrical input	[kW]	54,8	53,4	58,6	63,3	69,8	72,7	82,3	83,6	94,5	102,3	110	129
Absorbed current	[A]	87,8	85,7	93,9	101,5	111,9	116,6	132	134	151,5	164	176,4	206,8
TOTAL COP	[-]	7	6,99	6,91	6,98	7,12	7,08	6,94	6,93	6,78	6,82	6,89	6,69
USER Water flow	[kg/h]	28435	27682	29976	32779	36959	38272	42328	42905	47307	51571	56052	63583
USER water pressure drops	[kPa]	30	29	33	31	33	22	25	26	31	30	30	30
DHW water flow	[kg/h]	37884	36899	40076	43696	49008	50823	56523	57320	63582	69200	75015	85791
DHW pressure drops	[kPa]	48	46	54	52	55	32	40	42	5	49	48	50
Heating mode: user 40 - 45°C, dissipation 15 - 10°C													
Heating capacity	[kW]	**244,3**	**238**	**258**	**281,23**	**315,1**	**325,7**	**363**	**367,5**	**407,7**	**444,8**	**481,4**	**547,5**
Electrical input	[kW]	50	48,2	52,9	57	63,3	65,4	75,1	75,6	85,8	93,1	100,3	115
Absorbed current	[A]	80,1	77,4	84,8	91,4	101,6	104,9	120,4	121,2	137,5	149,2	160,9	184,5
COP	[-]	4,89	4,93	4,85	4,94	4,98	4,98	4,84	4,86	4,75	4,78	4,8	4,76
USER Water flow	[kg/h]	42543	41353	44837	48891	54768	56606	63082	63868	70853	77301	83657	95146
USER water pressure drops	[kPa]	59	57	67	63	67	39	48	51	62	60	59	61
DISSIPATION Water Flow	[kg/h]	33846	33038	35730	39066	43844	45326	50157	50846	56099	61287	66384	75351
DISSIPATION Water pressure drop	[kPa]	41	40	45	43	45	29	34	35	42	41	41	41
Heating mode: DHW 45 / 50°C, dissipation 15 / 10°C													
Heating capacity	[kW]	**236,1**	**230,3**	**249,9**	**272,4**	**305,2**	**316,2**	**351,5**	**356,3**	**395,5**	**431,7**	**466,5**	**532,6**
Electrical input	[kW]	55	53,5	58,6	63,4	69,9	72,8	82,7	83,7	94,6	102,5	110,7	129,1
Absorbed current	[A]	88,2	85,8	94	101,6	112,1	116,8	132,6	134,3	151,7	164,4	177,5	207
COP	[-]	4,29	4,31	4,26	4,3	4,36	4,34	4,25	4,25	4,18	4,21	4,22	4,13
USER Water flow	[kg/h]	41110	40089	43500	47428	53130	55050	61202	62033	68860	75155	81221	92726
USER water pressure drops	[kPa]	56	54	63	60	63	37	46	48	59	57	56	58
DISSIPATION Water Flow	[kg/h]	31615	30861	33386	36495	41055	42476	46940	47590	52559	57485	62144	70502
DISSIPATION Water pressure drop	[kPa]	36	35	40	38	40	26	30	31	38	37	36	37
Maximum absorbed current	A	116	122	132	142	153	159	174	182	204	218	232	281
Inrush current	A	361	250	321	328	336	301	401	355	374	437	442	490
Sound power level	dB/A	78	81	81	81	81	82	81	82	82	82	83	83

OVERALL DIMENSIONS MULTIFUNCTION LEP 041-092

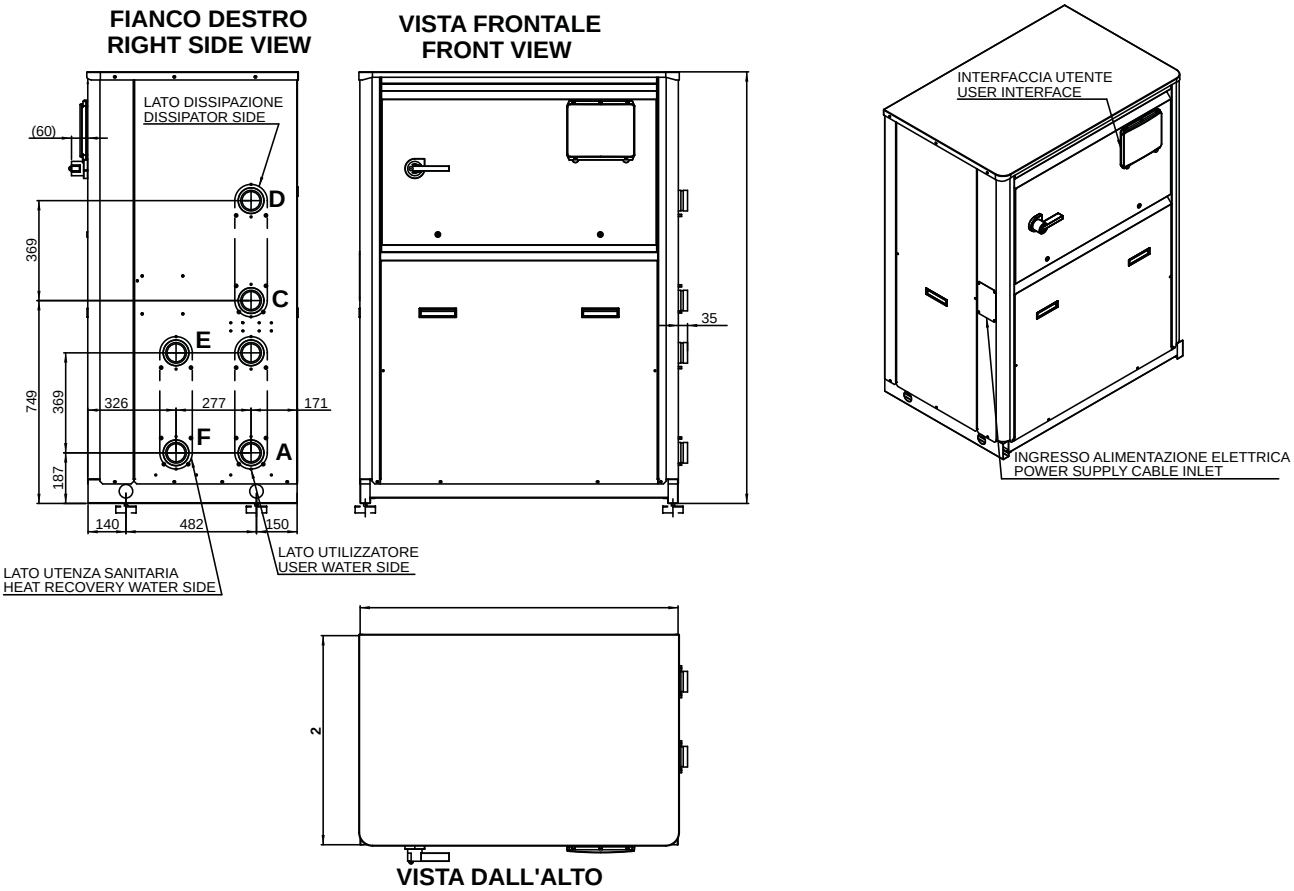

	UNITA' GEOTERMICA POLIVALENTE POLYVALENT GEOTHERMAL HEATPUMP	
LATO UTILIZZATORE USER WATER SIDE	A= Uscita acqua Water outlet	B= Ingresso acqua Water inlet
LATO DISSIPAZIONE DISSIPATOR SIDE	C= Uscita acqua Water outlet	D= Ingresso acqua Water inlet
LATO UTENZA SANITARIA HEAT RECOVERY WATER SIDE	E= Uscita acqua Water outlet	F= Ingresso acqua Water inlet
CONNESSIONI IDRAULICHE HIDRAULIC CONNECTIONS	2"1/2 VICTAULIC	

OVERALL DIMENSIONS MULTIFUNCTION LEP 111-182

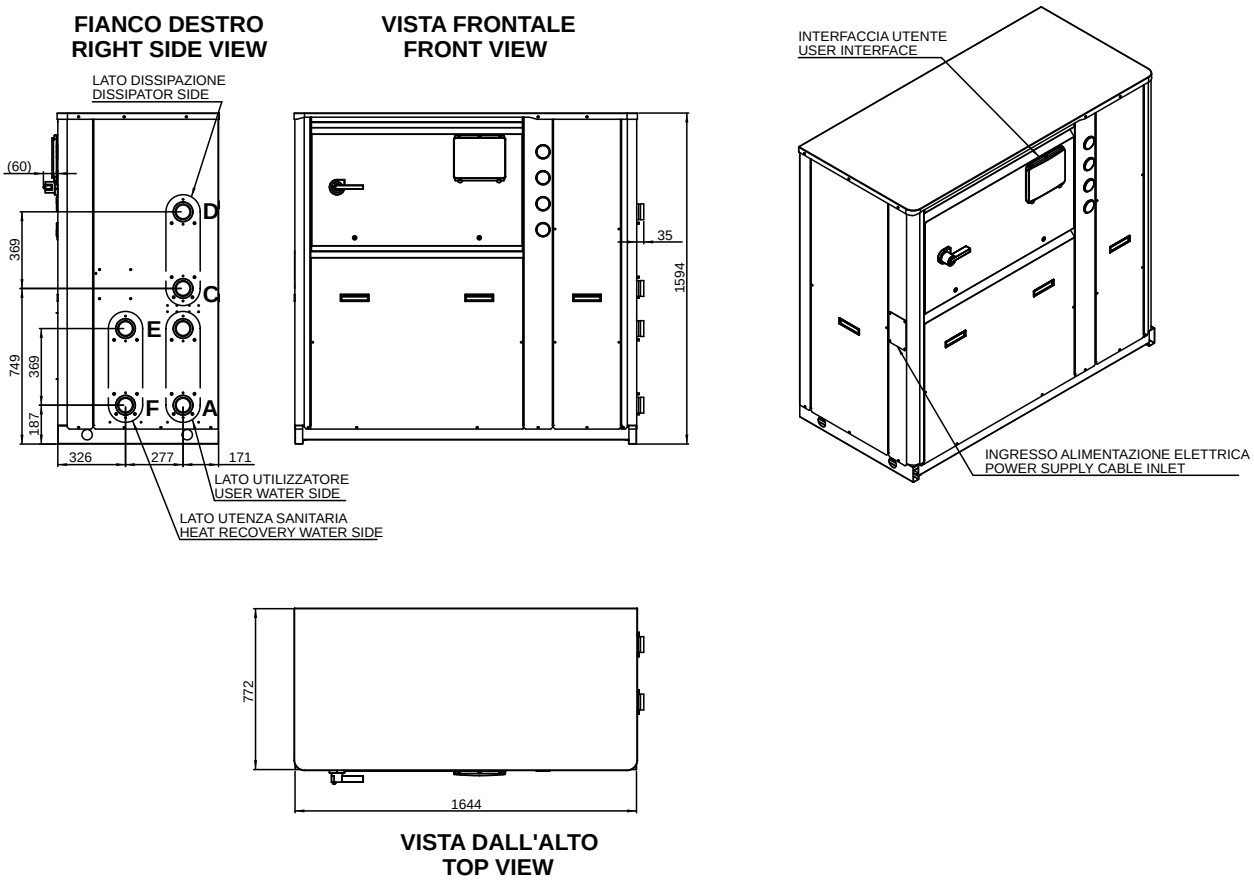

	UNITA' GEOTERMICA POLIVALENTE POLYVALENT GEOTHERMAL HEATPUMP	
LATO UTILIZZATORE USER WATER SIDE	A= Uscita acqua Water outlet	B= Ingresso acqua Water inlet
LATO DISSIPAZIONE DISSIPATOR SIDE	C= Uscita acqua Water outlet	D= Ingresso acqua Water inlet
LATO UTENZA SANITARIA HEAT RECOVERY WATER SIDE	E= Uscita acqua Water outlet	F= Ingresso acqua Water inlet
CONNESSIONI IDRAULICHE HIDRAULIC CONNECTIONS	2"1/2 VICTAULIC	

OVERALL DIMENSIONS MULTIFUNCTION LEP 144-184

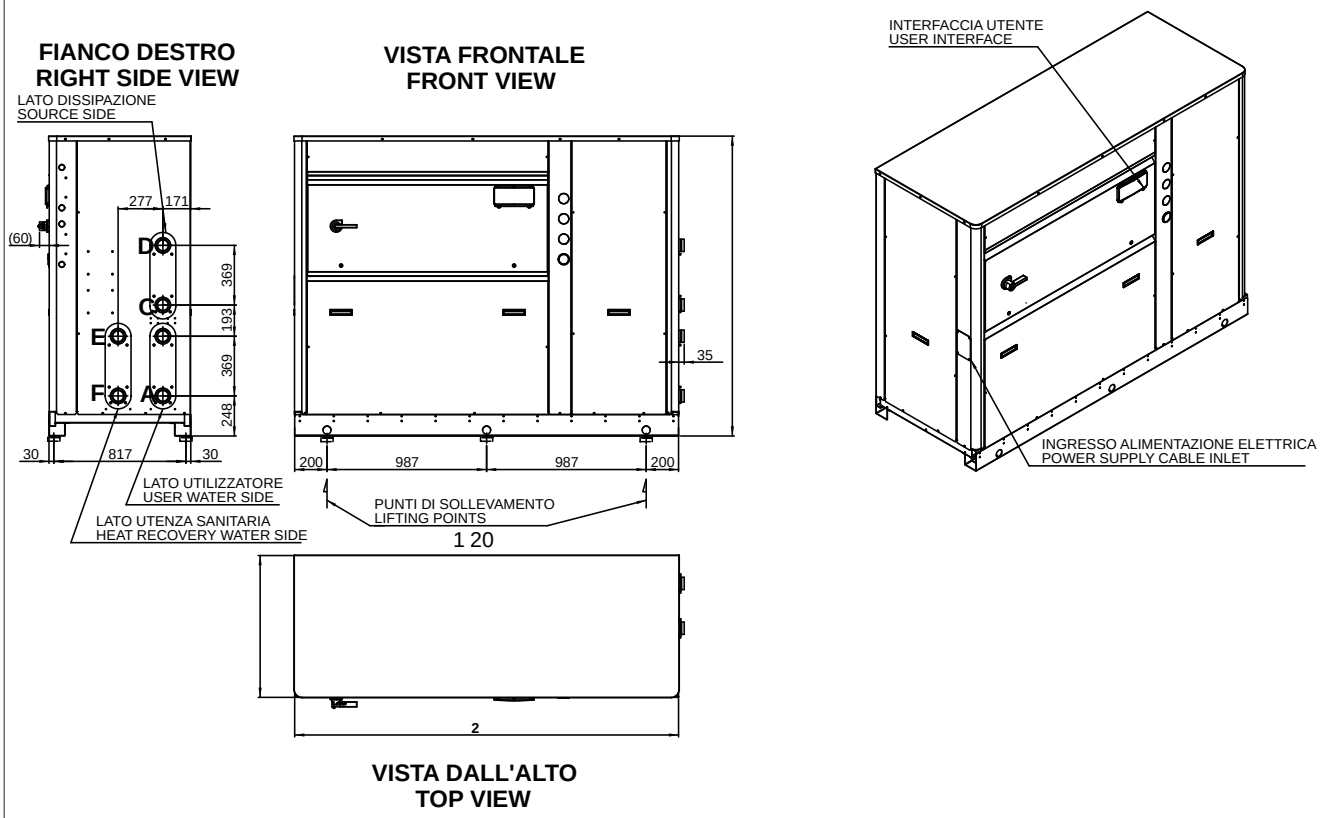

	UNITA' GEOTERMICA POLIVALENTE POLYVALENT GEOTHERMAL HEATPUMP	
LATO UTILIZZATORE USER WATER SIDE	A= Uscita acqua Water outlet	B= Ingresso acqua Water inlet
LATO DISSIPAZIONE SOURCE SIDE	C= Uscita acqua Water outlet	D= Ingresso acqua Water inlet
LATO UTENZA SANITARIA HEAT RECOVERY WATER SIDE	E= Uscita acqua Water outlet	F= Ingresso acqua Water inlet
CONNESSIONI IDRAULICHE HIDRAULIC CONNECTIONS	3" VICTAULIC	

OVERALL DIMENSIONS MULTIFUNCTION LEP 204-214

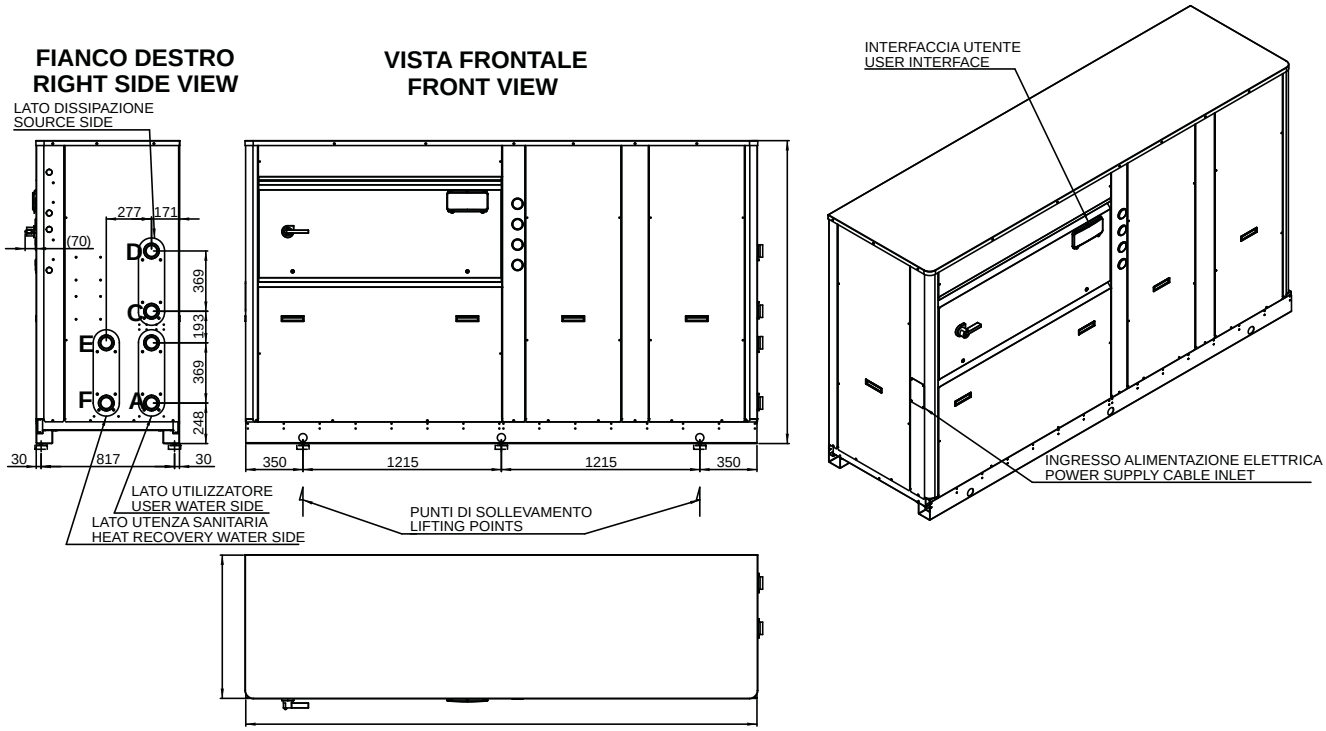

	UNITA' GEOTERMICA POLIVALENTE POLYVALENT GEOTHERMAL HEATPUMP	
LATO UTILIZZATORE USER WATER SIDE	A= Uscita acqua Water outlet	B= Ingresso acqua Water inlet
LATO DISSIPAZIONE SOURCE SIDE	C= Uscita acqua Water outlet	D= Ingresso acqua Water inlet
LATO UTENZA SANITARIA HEAT RECOVERY WATER SIDE	E= Uscita acqua Water outlet	F= Ingresso acqua Water inlet
CONNESSIONI IDRAULICHE HIDRAULIC CONNECTIONS	3" VICTAULIC	

OVERALL DIMENSIONS MULTIFUNCTION LEP 243-424

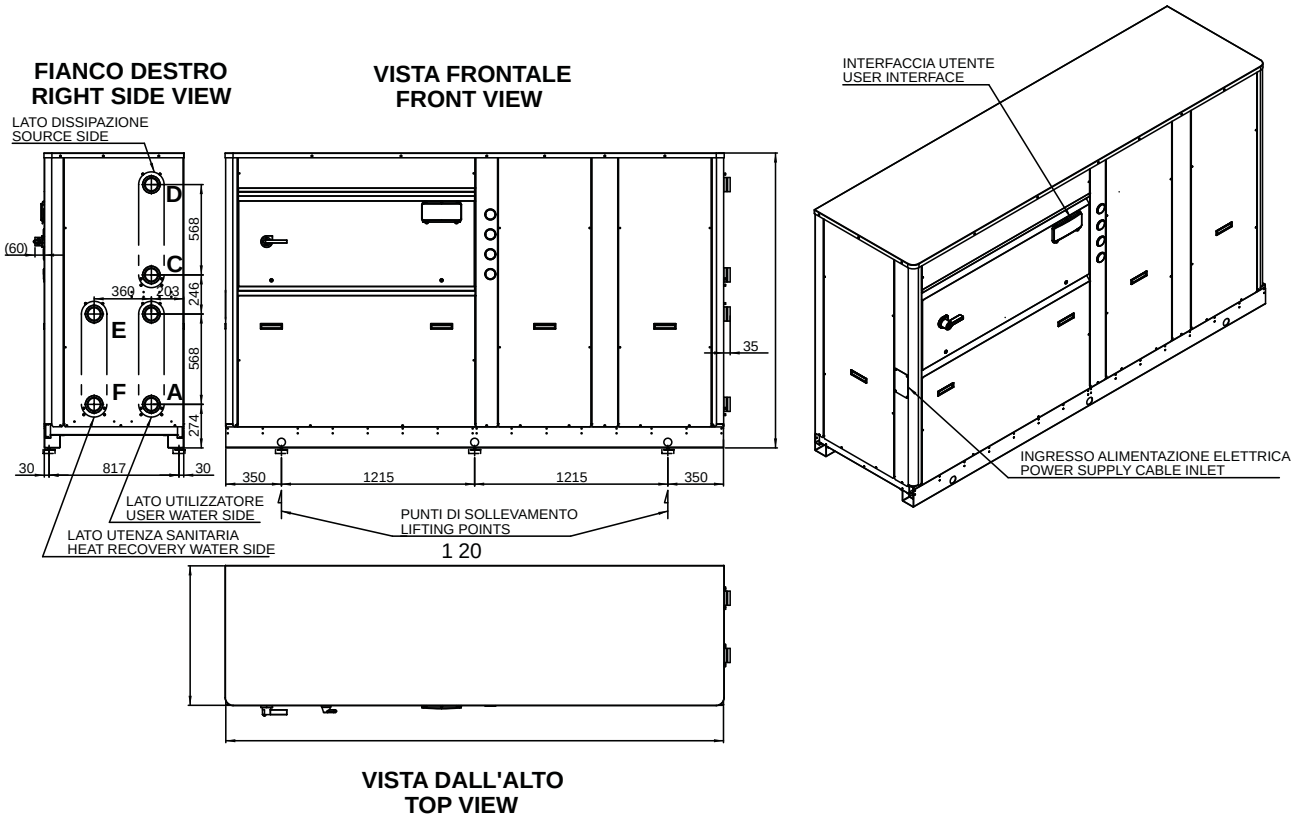

	UNITA' GEOTERMICA POLIVALENTE POLYVALENT GEOTHERMAL HEATPUMP	
LATO UTILIZZATORE USER WATER SIDE	A= Uscita acqua Water outlet	B= Ingresso acqua Water inlet
LATO DISSIPAZIONE SOURCE SIDE	C= Uscita acqua Water outlet	D= Ingresso acqua Water inlet
LATO UTENZA SANITARIA HEAT RECOVERY WATER SIDE	E= Uscita acqua Water outlet	F= Ingresso acqua Water inlet
CONNESSIONI IDRAULICHE HIDRAULIC CONNECTIONS	3" VICTAULIC	

Via Romagnoli 12/a - 40010 Bentivoglio Bologna Italy
Tel. +39 051 8908111 fax +39 051 8908122
www.galletti.it - info@galletti.it

RG66008777 - Rev.00